User Manual for the

Sunshine Pyranometer

type SPN1

SPN1-UM-4.0

Delta-T Devices Ltd

Notices

Copyright

All rights reserved. Under the copyright laws, this manual may not be copied, in whole or in part, without the written consent of Delta-T Devices Ltd. Under the law, copying includes translation into another language.

Copyright © 2016 Delta-T Devices Limited

SPN1 Sunshine Pyranometer optics design and theory are copyright © 1996 John Wood, Peak Design Ltd, Winster, Derbyshire, U.K. and protected by Patent No. EP1012633 & US6417500.

Trademarks

Windows is a registered trademark of Microsoft Corporation.
All other trademarks are acknowledged. Some names referred to are registered trademarks.

CE Conformity

The SPN1 Sunshine Pyranometer conforms to EU regulations regarding electromagnetic emissions and susceptibility and is CE marked by Delta-T Devices Ltd.

Warnings

To maintain conformance to CE standards, the equipment must be used as described in this manual. Modifications to the equipment may invalidate CE certifications.

Delta-T Devices Ltd reserves the right to change the designs and specifications of its products at any time without prior notice.

Author

John Wood
Editor: 2016 Nick Webb

User Manual Version: 4.0 May 2016

Delta-T Devices Ltd
130 Low Road, Burwell
Cambridge CB25 0EJ
UK

Tel: +44 (0)1638 742922
Fax: +44 (0)1638 743155
email: sales@delta-t.co.uk
web: www.delta-t.co.uk

Contents

Introduction 5

About this manual 5
Description and functions 5
Construction 8
Accessories 10
Test Overview: Use with a Logger 11
Overview: Use with a PC running SunRead 12
Cables 13
Power connection options 15
Use with a data logger 17
Delta-T data logger connections 24
Use with a PC or serial device 25

Test Accuracy and errors 26

Technical reference 27

Specifications 27
SPN1 spectral response 29
SPN1 cosine response 30
Routine maintenance 31

Calibration procedure and traceability 33

Warranty and service 37

Terms and conditions of sale 37
Service and spares 38
Technical support 38
Problems 39
Troubleshooting 39

Appendix A: Design and test summary 40

Introduction 40
Design objectives 40
How the design evolved 40
Calculation of outputs 41
Test results 42

Appendix B: RS232 commands 45

Operating modes and serial commands 45

Appendix C: DNI RS232 Commands 49

Introduction 49
About DNI 50
Location & Time 52
SPN1 electrical connections 53
RS232 Commands for obtaining DNI 55
Conversion of GPS sentences for use with SPN1 57
SPN1 DNI Command usage 59

Glossary 60

Introduction

About this manual

This manual describes the SPN1 Sunshine Pyranometer and how to use it. See also the ***SPN1 Quick Start Guide***.

Appendix 1 describes the SPN1 design and includes a summary of the test results of several experimental trials of the SPN1.

The **Delta-T Software and Manuals DVD** contains document files in Acrobat pdf format, and software. It includes this manual, the ***SPN1 Quick Start Guide***, and other files relating to the SPN1. It also contains the SunRead software.

Description and functions

What it measures

- The SPN1 Sunshine Pyranometer is one sensor with three output channels:-
  1. Total (global) solar radiation
  2. Diffuse radiation
  3. Sunshine status.
- The SPN1 measures short wave radiation between 400nm and 2700nm in $W.m^{-2}$.
- The Direct beam component of solar radiation can be calculated from the Total minus the Diffuse component.
- Direct Normal Incidence can be calculated using a spreadsheet[1].
- The Sunshine status output indicates whether the energy in the direct beam exceeds the WMO standard threshold value of 120 $W.m^{-2}$, using an algorithm based on the Total radiation, and the ratio of Total to Diffuse radiation.
- The radiation outputs have a cosine-corrected response.

What it is used for

- Meteorological Global, Direct and Diffuse solar radiation and sunshine duration measurements.
- Solar energy monitoring, and solar collector studies.

[1] From www.delta-t.co.uk

- Architecture and building design, illumination and heat balance studies of buildings.

Advantages of SPN1

- No shadow band or solar tracker.
- There are no moving parts.
- It does not need to be adjusted or repositioned to track the sun – a distinct advantage over shade rings or mechanical trackers.
- It does not need to be oriented towards North. It will work accurately in any orientation as long as it is mounted horizontally.
- It does not require knowledge of the Latitude or Longitude, and can be used at any Latitude or Longitude[2].
- It measures sunshine hours as well as Total and Diffuse radiation.
- The built-in heater allows use in wet or icy conditions.

SunRead PC software

- The Delta-T Software and Manuals CD contains SunRead Windows PC software that will read the SPN1 output values and status information via the PC RS232 serial port.
- SunRead also provides a basic logging capability while the SPN1 is connected to the PC.

Use with data logger

- The three outputs of the SPN1 can be logged with a suitable data logger. The Total and Diffuse radiation millivolt outputs require two analogue channels.
- The sunshine state logic output can be taken to a digital channel, or for some purposes can be connected to an analogue channel in order to give readings of sunshine duration.
- The SPN1 is a powered sensor, and requires a power supply of 2mA at 5V – 15V, from the data logger, the heater supply, or elsewhere.
- The SPN1 heater requires a permanent power supply of 12V – 15V at up to 1.5A.

[2] **D**irect **N**ormal **I**rradiance calculation does require Latitude and Longitude, and also the local time difference relative to GMT. These can be added retrospectively during analysis using the DNI Excel add-in available for download from our website.
DNI can also be calculated by the SPN1: see Appendix C on page 49

Use via serial port

- The SPN1 can be interrogated from any serial port program (eg Windows Hyper Terminal) - see Appendix B: RS232 commands.

Differences from BF2 and BF3

- The BF2 and BF3 use the same optical design as the SPN1, and have a similar set of outputs. The BF2 & BF3 use photodiodes rather than thermopile sensors and so have a narrower spectral range. They are not as rugged or as accurate as the SPN1.

Construction

Seven thermopile sensors are mounted under cosine-corrected diffusers, all under a patterned, hemispherical dome, along with a levelling bubble, a desiccant-status indicator, and a red light emitting diode (LED). The LED flashes when the SPN1 is taking readings.

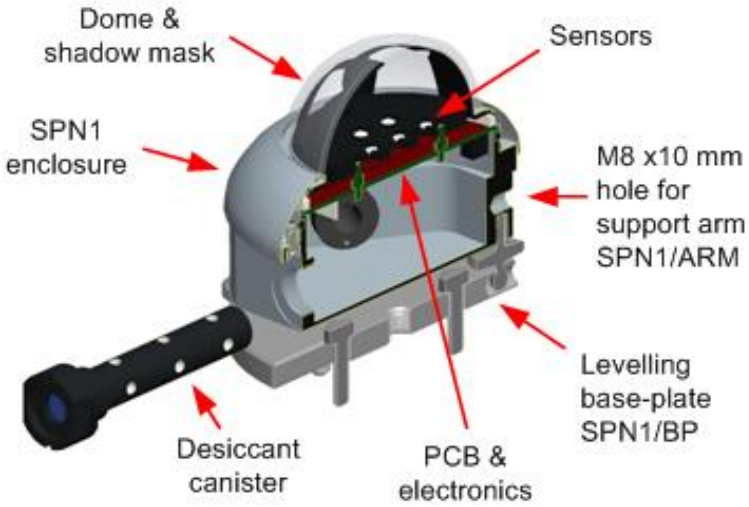

Section through SPN1

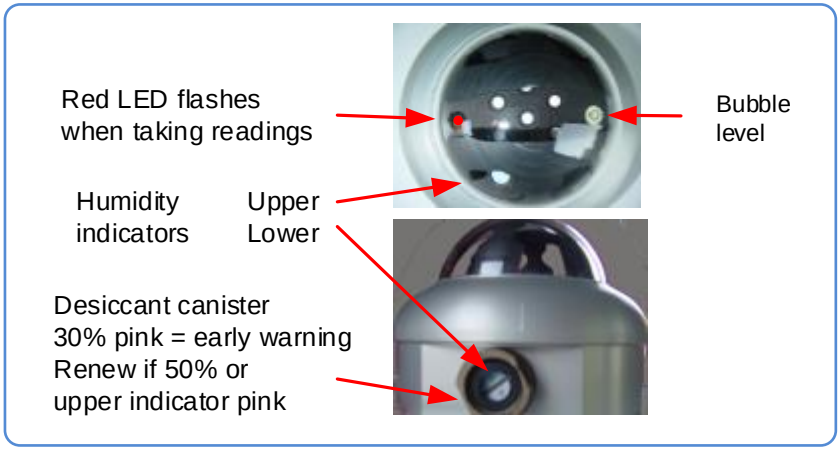

There are two external connectors, a 5-pin RS232 connector for serial communications, and an 8-pin connector for analogue signals and power.

The serial port is provided for checking real time readings, using the SunRead software, or for attachment to digital data collection systems. See also Appendix B: RS232 commands

The desiccant can be renewed by unscrewing the indicator plug from the side of the SPN1 and replacing the canister.

A fully adjustable levelling baseplate is also available.

Accessories

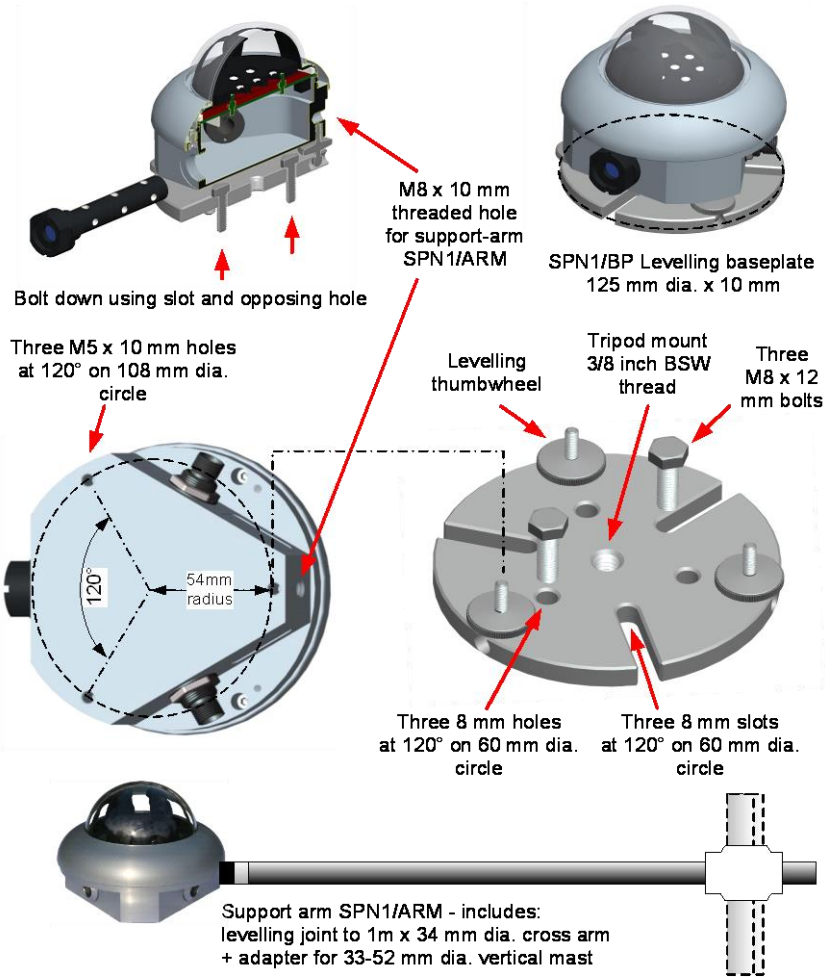

See the Specifications on page 28 for a full list of accessories.

Mounting

The SPN1 may be mounted either -

- directly onto a horizontal surface
- or via support arm type SPN1/ARM which includes a ball-joint for levelling and an adapter for connecting to a vertical mast
- or on to the adjustable levelling baseplate (type SPN1/BP).

Test Overview: Use with a Logger

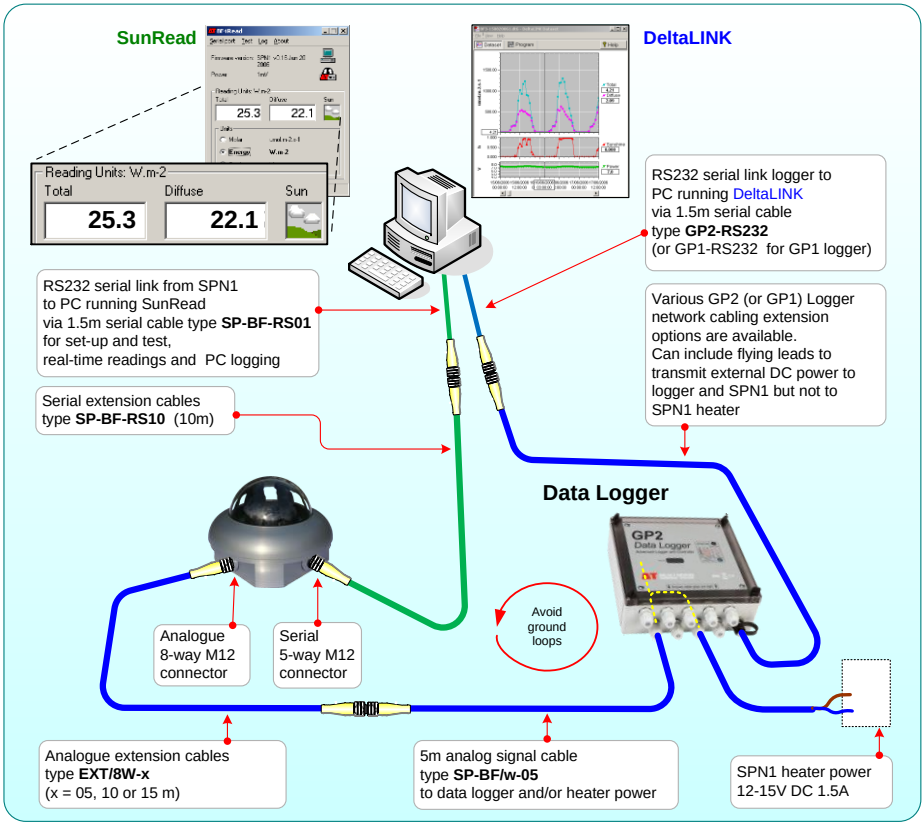

See also ***Use with a Data Logger*** on page 17

Overview: Use with a PC running SunRead

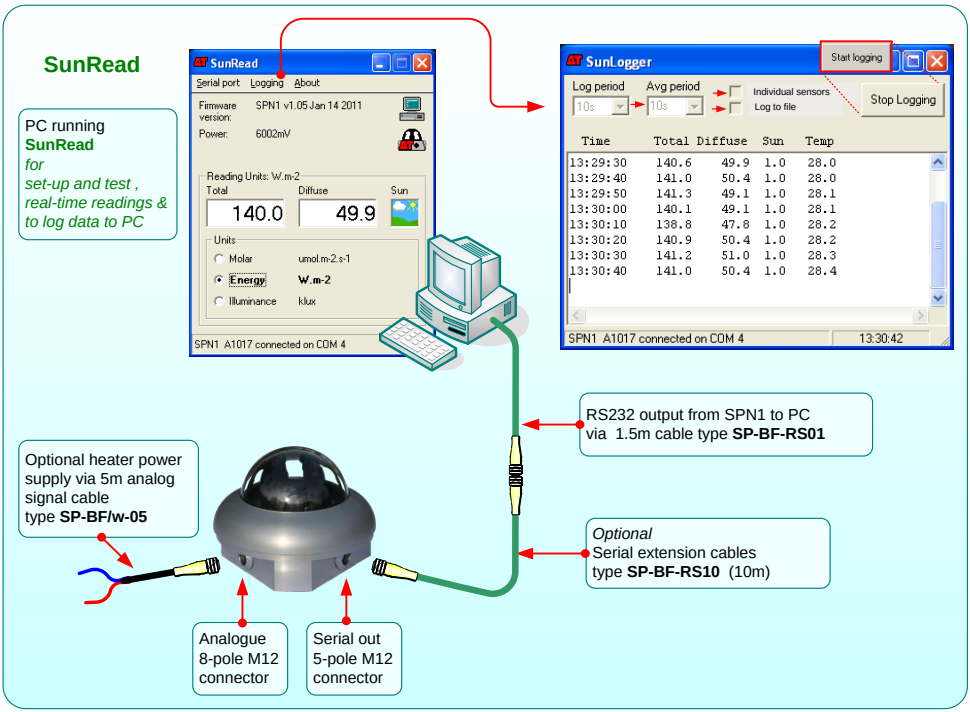

See also: ***Use with a PC or serial device*** on 25

Cables

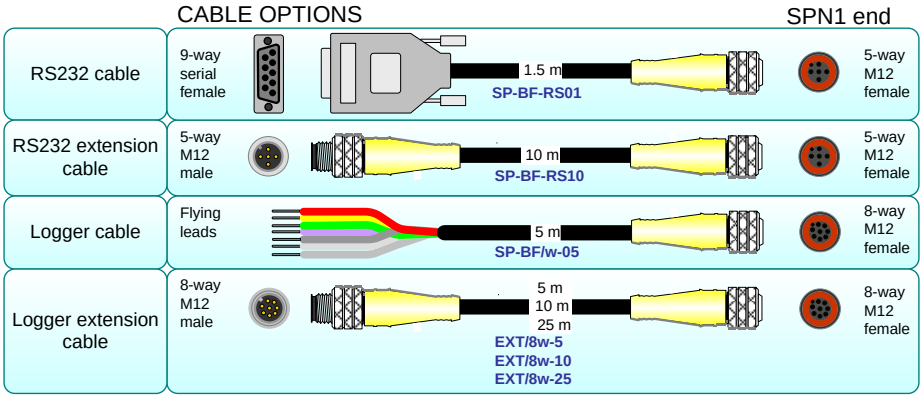

Serial Cables

The 5-core serial cable type SP-BF-RS01 is provided for connecting the SPN1 to a PC and is intended primarily for set-up and testing.
It is 1.5 m long and terminated in a 5-pole M12 connector at the SPN1 and a DB9 connector at the PC end.
Note: The DB9 connector is not weatherproof.

Serial extension cable type SP-BF-RS10 is available in 10 m lengths to extend the SP-BF-RS01 cable. It terminates in IP-68 weatherproof M12 5-pole male and female connectors.

See also *Maximum Cable* Lengths on page 14

For extension cabling options from the PC to a GP2 logger see the ***GP2 User Manual***

For extension cabling options from the PC to a GP1 logger see the ***GP1/DL6 Network Quick Start Guide.***

Manuals are available on the **Delta-T Software and Manuals DVD** and at www.delta-t.co.uk

Analogue Cables

The 8-core analogue cable type SP-BF/w-05 is provided for connecting the SPN1 to a data logger and to carry power to the internal SPN1 heater. It is 5m long with a weatherproof M12 8-pole connector at the SPN1 and with bare wire flying leads at the logger end.

Analogue extension cables type EXT/8w-x, where x = 5, 10 or 25m are available for extending the serial cable from SPN1 to logger.

See also *Maximum Cable* Lengths on page 14.

Maximum Cable Lengths

Serial cable: the maximum length usually depends on how good the line driver is in the PC, and can typically vary from 5 to 100m.

Analogue cable: 100m - provided the power supply at the SPN1 exceeds 5V at 2mA for sensor alone, or 12V at up to 1.5A for heater.

Power: Don't exceed the maximum specified supply voltage of 15V.

For a 15V supply, the heater will work as intended up to 50m cable length, and with a reduced effectiveness for longer cable lengths.

Note: Always use differential sensor measurement when using data loggers. (The heater return current can cause large single-ended measurement errors).

Power connection options

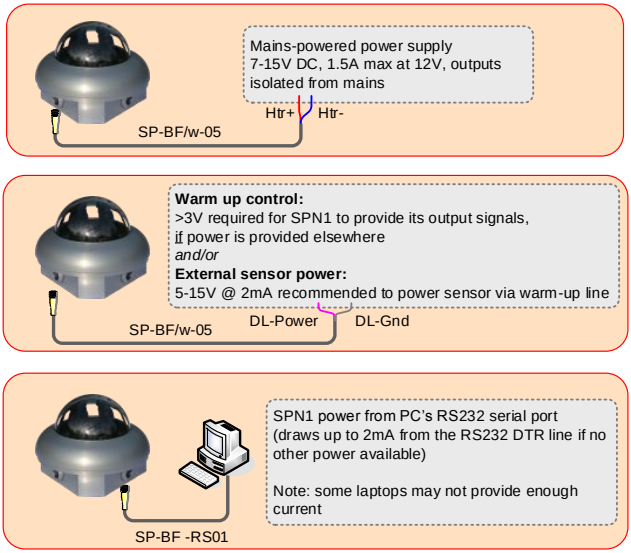

Heater power
(To enable analogue outputs connect the separate logger warmup line - see below)

Power via logger warmup.
Analogue outputs enabled.
No heater.

Power from PC

Power considerations

The SPN1 is a powered sensor. There are three possible sources of power:

1. Power from the data logger. This only needs to be applied when the logger takes a reading. The SPN1's Total, Diffuse and Sun outputs on the analogue output connector are valid 100ms after power is applied, and are updated every 100ms. These analogue outputs are only enabled when there is a voltage present on the data logger power input.
2. Power from the 12V heater supply.
3. Power from the serial cable. The SPN1 draws power from the PC DTR signal. Most computer serial ports will provide enough power for the SPN1 sensor electronics (but not its heater).

If more than one of these sources is present, then power is generally taken from the source with the highest voltage.

You can prevent power being drawn from the data logger by including a 10k resistor in the logger power cable, as long as power is available from elsewhere, e.g. from the heater supply.

Heater

The SPN1 is fitted with an internal thermostatically controlled heater for protection against frost and condensation. The heater is mounted on the shadow mask, which will transfer heat around the inside of the dome and the top of the enclosure.

When power is applied to the heater supply cables, it works as follows:-

- The heater current is controlled by a 4Hz pulse-width modulated switch.
- If the external temperature is below 0°C, the heater provides the full power available (up to 20W at 15V).
- Above 0°C, the power reduces smoothly to 20% at 5°C, and then down to nothing at 33°C.

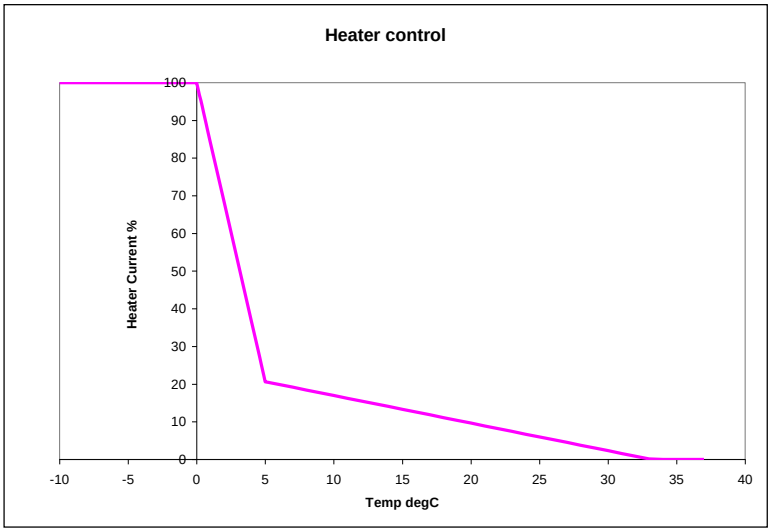

At zero wind speed the dome will remain snow and ice-free down to minus 20°C.

At 2m.s^{-1} wind speed the dome will remain snow and ice-free down to minus 10°C.

In air temperatures below freezing the heater can consume 1.5A at 12V DC. A 40 Ah battery will only last about one day, so for extended data logging in cold climates, we recommended that you power the heater via a 12V DC supply powered from the mains.

Warning! Do not apply AC mains power to the SPN1.

Use with a data logger

Analogue outputs

The SPN1 is connected to a data logger via an 8-pole M12 waterproof connector using cable type SP-BF/w-05. See also Cables on page 13. Additional weatherproof extension cables with M12 connectors at each end are also available (type EXT/8w-x where x = 5, 10 or 25m).

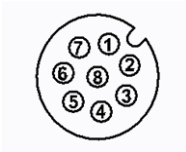

SPN1 analogue output connector pin-out

(looking at the sockets on the SP-BF/w-05 cable connector)

Signal Name	Pin No	SP-BF/w-05 Cable	Cable Notes
Total	1 ----	White	Total output, 1mV = 1 W.m^{-2}
Diffuse	2 ----	Brown	Diffuse output, 1mV = 1 W.m^{-2}
SigGND	3 ----	Green	Signal ground (connected to DL-Gnd internally)
Sun	4 ----	Yellow	Contact closure on sunshine
DL-Gnd	5 ----	Grey	Datalogger power ground
DL-Power	6 ----	Pink	Datalogger power supply 4 - 15V 2mA
Htr-	7 ----	Blue	Heater ground
Htr+	8 ----	Red	Heater power supply, 12V 1.5A max
Screen		**Screen**	Cable screen and SPN1 body

The Total, Diffuse and Sun outputs are active 100ms after a voltage is applied to the DL-Power cable, and are updated every 100ms.

The Total and Diffuse outputs have a range of 0V – 2.5V (0V – 1.3V in normal daylight conditions), with an internal resistance of 100Ω. There is also some protection on these outputs if they are taken outside their normal range. These outputs should be measured by a high impedance voltage input channel, with SigGND taken to the negative input of the channel.

The sun output is switched by a FET (transistor) to ground. When there is no sun, this output is open-circuit. When there is sun, it is connected to ground. Any voltage applied to this output should be between 0V and 15V, with a maximum current capacity of 500mA (0.5A). If this output is used to switch more than a few milliamps, you should ensure that the current flows back through the DL-Gnd cable, and not the SigGND, otherwise there may be voltage errors in the Total and Diffuse measurements.

The DL-Power and DL-Ground connections provide power to the sensor circuitry (but not the heater), and enable the analogue output signals.

The Htr+ and Htr- cables provide power to the SPN1 heater. If this power supply is separate from the data logger power, it should be a fully isolated supply, so that no current flows between the power supply negative terminals.

Simplified output schematic

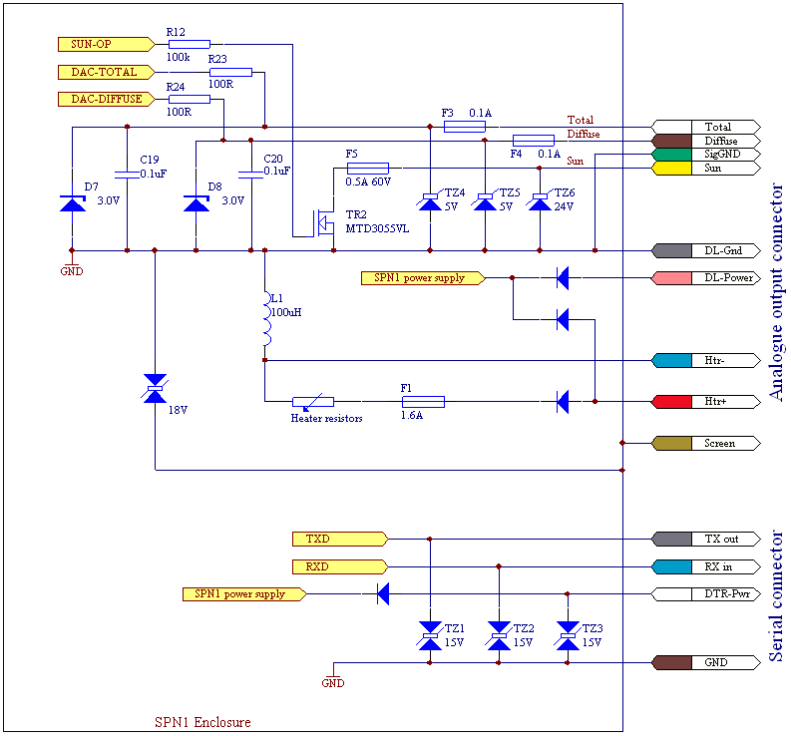

This schematic shows a simplified version of the output circuitry, protection components and grounding details.

The Total and Diffuse outputs are protected from electrostatic discharge (ESD) by the transient voltage suppressors TZ4-6, and from low voltage misconnection by the zener clamps D7 & D8, and resettable fuses F3 & F4 (the fuses reset when the fault is removed). The Sun output has similar protection against ESD and overcurrent.

The heater circuit is protected against reverse connection and overcurrent. Htr- is connected to the main sensor ground by an inductor, to protect it from any noise in the heater circuit.

The serial port lines have basic ESD protection.

Suggested power supply connections

For use with a data logger, the DL-Power line has to be at 5V or more to enable the analogue outputs. The power required can be taken either from the DL-Power line, or the heater supply. For most logging situations, one of the following two connections is recommended.

1 No heater, SPN1 powered by logger warmup

This connection would be appropriate for an isolated, battery powered logger such as the Delta-T GP1. The SPN1 heater is left disconnected. The logger must power up the SPN1 at least 100ms before the reading is taken.

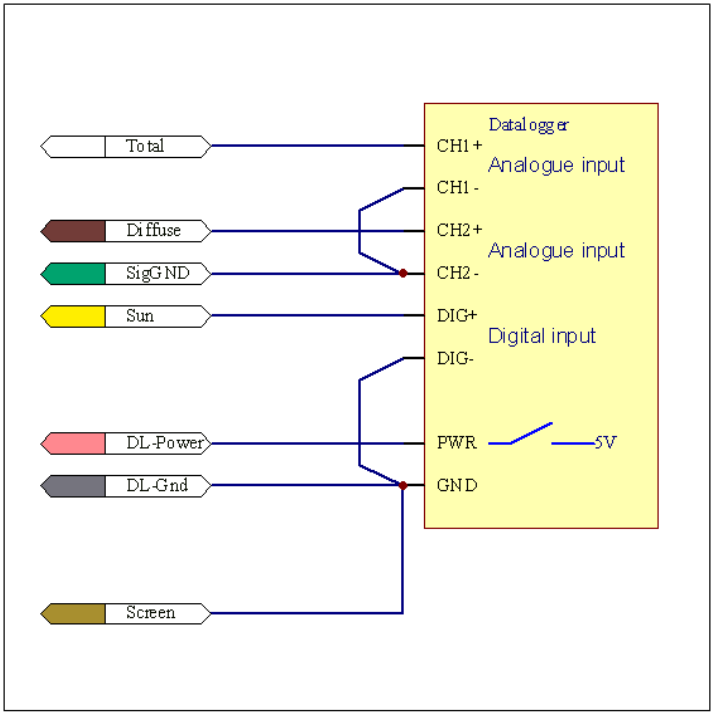

2 Heater power available, SPN1 permanently enabled

This connection would be appropriate to an installation with permanent mains power available. The SPN1 heater is powered up, and the SPN1 analogue outputs are permanently enabled for logging.

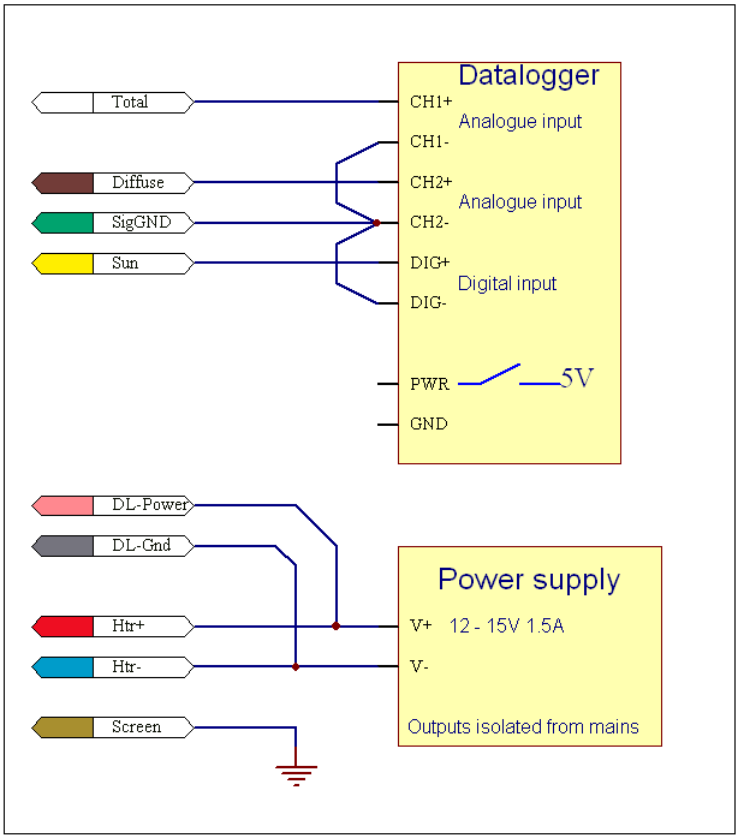

Suggested Sun output connections

There are several possible ways of connecting up the SPN1 Sun output, depending on the capabilities of your data logger. The Sun output is open circuit when there is no sun, and connected to ground when there is sun.

1 Logger digital input

In general this will be the simplest connection if your logger has a digital input. Connect as shown in the previous two diagrams. The logger digital input is usually referenced to logger ground, so you should take care only to connect this to SigGND if the logger is not supplying power for the SPN1. Otherwise, power supply currents may flow through the SigGND cable, which may cause voltage offsets on the Total and Diffuse readings with long cable lengths.

2 Logger resistance input

If the logger has no digital inputs, but can measure resistance, then the Sun output can be measured with a 10k resistor connected in parallel. This will be measured as 10k with no sun, and 0k with sun present. Disable any autoranging on the input.

Note : The following scheme is for illustration only. Refer to your own logger user manual for the correct wiring instructions, which may be different.

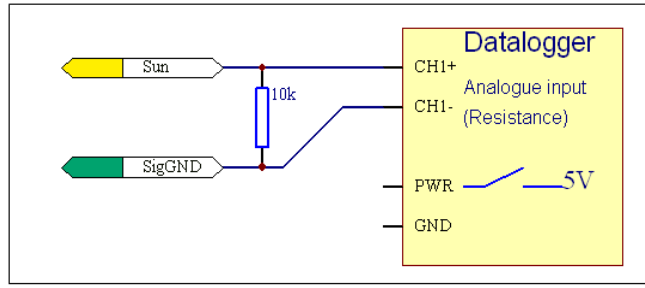

3 Logger voltage input with pull-up resistor

Alternatively, if a stable voltage is available in the logger, you can use a 10k pull-up resistor, and measure the Sun output with a voltage channel.

Sun present = 0 V, no sun = 5 V.
Note: Your logger must be able to read the voltage going into the resistor. If it is too high, use a potential divider.

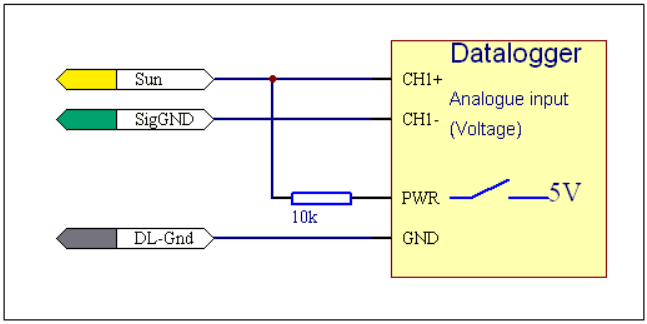

4 Switching an external load

If for any reason you want to use the Sun output to switch a high current load, you should make sure that the current return path is through the DL-Gnd wire, and not the SigGND wire, otherwise you may see large offset voltages on your Total and Diffuse readings.

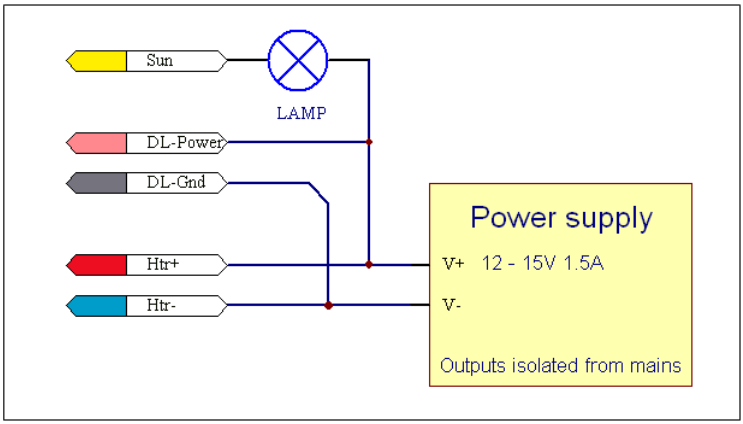

Ground and screen connections

Ground connections

There are three different ground connectors in the SPN1 analogue output cable (and another one in the serial cable), so it is possible to create offsets in the readings if these are used without care, especially with long cables. You also need to think about how the data logger ground is connected internally.

Some key principles to remember are:

- Ensure that no return currents flow in the SigGND wire. This should only go to the –ve terminal of a differential voltage input channel.
- Ensure that the current returns for the DL-Pwr wire and the Sun wire are through the DL-Gnd wire.
- Ensure that the current return for the Heater current (Htr+) is through the Htr- wire.
- If you use a logger and a separate power supply, then one of them must be able to float relative to the other, or they must share a common ground connection.

Earthing and screen connections

The braided screen of the 8-core analogue cable type SP-BF/w-05 is connected to the SPN1 enclosure internally, creating a continuous screen around the sensor electronics and output connectors. The screen is connected to the sensor ground by an 18V transient suppressor - to minimise the possibility of high voltages relative to the internal circuitry if there are nearby lightning strikes.

In general the screen (black wire) should be connected to local earth near the logger. The SPN1 may also be connected to earth at its mounting point. If there is a lightning strike nearby, there may be large transient voltages induced between earth points, and in the sensor cabling. Some of this may also appear on the signal wires. Because of this, the logger should either be free to float relative to local ground, or should have some form of transient protection on its inputs to avoid damage.

The 5-core serial cable type SP-BF-RS01 is screened. The screen is connected to the 5-pole M12 connector shell but not to the DB9 shell.

The 5-core serial extension cable type SP-BF-RS10 is also screened. The screen connects the M12 connector shells at both ends.

Delta-T data logger connections

GP1 logger

See the **SPN1 Quick start Guide** for a description of how to connect to and use a GP1 logger.

DL2e logger

See SPN1-DL2e wiring connections in the online sensor library of the Ls2Win PC software SR5 (service release 5) on the *Delta-T Software and Manuals CD.*

Note: If upgrading from an earlier service release of Ls2Win you will need to reinstall the sensor library. This is described in the online *Ls2Win Release Notes* installed with Ls2Win and which can be found from the **Start** menu under **Programs, Ls2Win, Documents.**

DL6 logger

The DL6 logger is not suitable for use with the SPN1. The input voltage range is insufficient and we provide no SPN1 sensor types or program for it.

Warning: Do not attempt to attach an SPN1 to a DL6 via the 8 pole M12 connector on the DL6. It may damage the sensor.

GP2 Logger

See the ***SPN1 Quick Start Guide***, the ***GP2 User Manual*** and ***DeltaLINK3 Help***. Full wiring instructions and program settings instructions are provided in the DeltaLINK 3 Sensor Library Info Pages for the SPN1.

Use with a PC or serial device

Connect the SPN1 to a PC or other serial device via the 5-pole M12 waterproof connector.
Use the 1.5 m serial cable type SP-BF-RS01 to connect directly to a PC serial port. This cable has a 5-pole mating connector and 9-pin D connector for the PC.
Note: The D connector is not weather proof, so should not be permanently used outside.

Use extension cable type SP-BF-RS10 for longer cable runs and for outside use – it terminates in weatherproof male and female 5-pole M12 connectors.

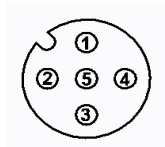

SPN1 serial connector pinout
(looking at pins on SPN1)

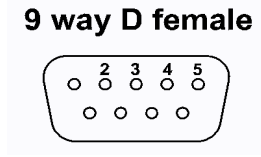

(solder side)

Signal Name	M12 Pin No	Cable colour	9 pin D female	Cable Notes
Gnd	1 ----	Brown	5	Ground
Power in	2 ----	White	4	Power from PC DTR line
RX in	3 ----	Blue	3	RS232 RX in to SPN1
SDI-12	4	Black		Not used
TX out	5 ----	Grey	2	RS232 TX out of SPN1

The SPN1 uses the serial connector for reporting readings, upgrading software, and for factory setup and testing.

The SunRead software on the Delta-T Software and Manuals DVD can be used to give an immediate display of the SPN1 outputs, and to give a very basic logging capability.

The SPN1 sensor (not the internal heater) can take its power from the DTR signal of the PC serial port (about 4mA at 12V). Most PC serial ports will supply this. If you have problems communicating with the SPN1, then try using a USB-RS232 converter, or power up the SPN1 via the analogue cable type SP-BF/w-05 (DL-Power or Htr+) from a logger or from an external power supply.
For power requirements see Other specifications on page 27.
See also: Appendix B: RS232 Commands on page 45.

Test Accuracy and errors

Overall accuracy limits are given in the specifications, which give the expected performance in normal use. There are some specific circumstances which may show unexpected results.

Spectral response

Because the SPN1 spectral response runs from 400nm upwards, it misses out some of the blue end of the solar spectrum, and this may show an under-reading of the diffuse component under very clear blue skies, or at high altitudes.

Cosine response

In relative terms, the cosine response error increases when the sun is close to the horizon. This may appear as an overall sensitivity error in clear-sky conditions when the sun is very low. This is true for all cosine-corrected sensors.

Errors due to inaccurate levelling also show up in these conditions – while a 0.5° levelling error has very little effect when the sun is high in the sky, or under overcast conditions, it can give a 5% output error when the sun is bright and 10° above the horizon.

Offsets

Most thermopile pyranometers show a negative output during the night, due to radiative cooling of the earth into space. The construction of the SPN1 includes three separating elements between the atmosphere and the thermopiles, so this effect is minimal. The electronics within the SPN1 will only measure and output positive signals, so the output should never go below zero. In general, there will be a small positive output ($<3W.m^{-2}$) in dark conditions, due to the effects of noise in the system.

The SPN1 is sensitive to fast changes in temperature, and these will create a positive error on cooling, or a negative error on warming. This may be visible if you move the sensor from a warm room into a cold atmosphere outside, until the sensor reaches ambient temperature.

Thermopile matching

The SPN1 outputs are based on 7 individual sensor readings. The sensors are closely matched at calibration, but will never be exactly identical in all respects. These small variations will sometimes show up as small steps in the output time series, as the shadowmask shades or exposes different sensors.

Technical reference

Specifications

The following accuracy figures give 95% confidence limits, i.e. 95% of individual readings will be within the stated limits under normal climatic conditions.

Overall accuracy: Total (Global) and Diffuse radiation	±5% Daily integrals ±5% ±10 $W.m^{-2}$ Hourly averages ±8% ±10 $W.m^{-2}$ Individual readings
Resolution	0.6 $W.m^{-2}$ = 0.6 mV
Range	0 to >2000 $W.m^{-2}$
Analogue output sensitivity	1 mV = 1 $W.m^{-2}$
Analogue output range	0 – 2500 mV
Sunshine status threshold	120 $W.m^{-2}$ in the direct beam

Other specifications

Accuracy: Sunshine status	±10% sun hours with respect to the threshold
Accuracy: Cosine correction	±2% of incoming radiation over 0-90° Zenith angle
Accuracy: Azimuth angle	± 5% over 360° rotation
Temperature coefficient	± 0.02% per °C typical
Temperature range	-20 to + 70°C
Stability	Recalibration recommended every 2 years
Response time	< 200 ms
Spectral response	400 - 2700 nm
Spectral sensitivity variation	10% typical
Non-linearity	< 1%
Tilt response	negligible
Zero offsets	< 3 $W.m^{-2}$ for a change of 5°C/hr in ambient temperature < 3 $W.m^{-2}$ dark reading
Latitude capability	-90° to + 90°
Environmental sealing	IP67
Sunshine status output	No sun = open circuit Sun = short circuit to ground

Power requirement	2 mA (excluding heater power), 5V – 15V DC
Heater power	12 V - 15 V DC, up to 1.5 A
Heater control	Continuously variable up to 20W output for external temperatures below 0°C
Lowest snow & ice-free temperatures (with heater in use)	-20°C at 0 m/s wind speed -10°C at 2 m/s wind speed
Mounting options	3 x M5 tapped holes in base at 108 mm dia, 120°spacing
Size & Weight	126 mm dia. x 94 mm high, 786g

Part numbers and order codes

SPN1	Sunshine Pyranometer. Fitted with 5 and 8-pole M12 plugs. Supplied with 5m analogue signal and power cable type SP-BF/w-05, 1.5 m serial cable type SP-BF-RS01, SPN1 Quick Start Guide, calibration certificate and Delta-T Software and Manuals DVD. Does not include leveling base-plate or support arm.
SP-BF-RS10	10m weatherproof RS232 extension cable. IP68 M12 5-pole male to female connectors. Connects SPN1 to SP-BF-RS01 cable or another SP-BF-RS10 .
SPN1/BP	Leveling base-plate. 125 mm dia. 10 mm thick plate with 3 M5 x thumbscrews and 3 M8 x 25 mm stainless steel bolts. See page 10
SPN1/ARM	Support arm for SPN1 with leveling joint. Length 1m, dia 34 mm with adapter for attaching to 33-52 mm dia. mast. Supplied with instruction sheet. See page 10
SPN1-SD	Spare desiccant for SPN1. 2 spare desiccant canisters (does not include RH indicator plug).
SPN1-UM	This SPN1 user manual.
SP-BF/w-05	5m analogue signal and power cable. 8 pole IP68 M12 connector (f) to bare wires. Connects SPN1 to data logger and/or power supply. Supplied as standard with Sunshine Pyranometer.
SP-BF-RS01	1.5m RS232 cable. 5 pole IP68 M12 connector to 9-pole D sub connector. Connects SPN1 to PC serial port. Supplied as standard with Sunshine Pyranometer.
SPN1-CAL	SPN1 recalibration and service. Factory recalibration and 2 year servicing of SPN1.
EXT/8w-05 **EXT/8w-10** **EXT/8w-25**	5m / 10m / 25m SPN1 analogue extension cables. 8 pole IP68 M12 female to male connectors. Connects SPN1 to SP-BF/w-05 cable, or to any EXT/8w cable.

SPN1 spectral response

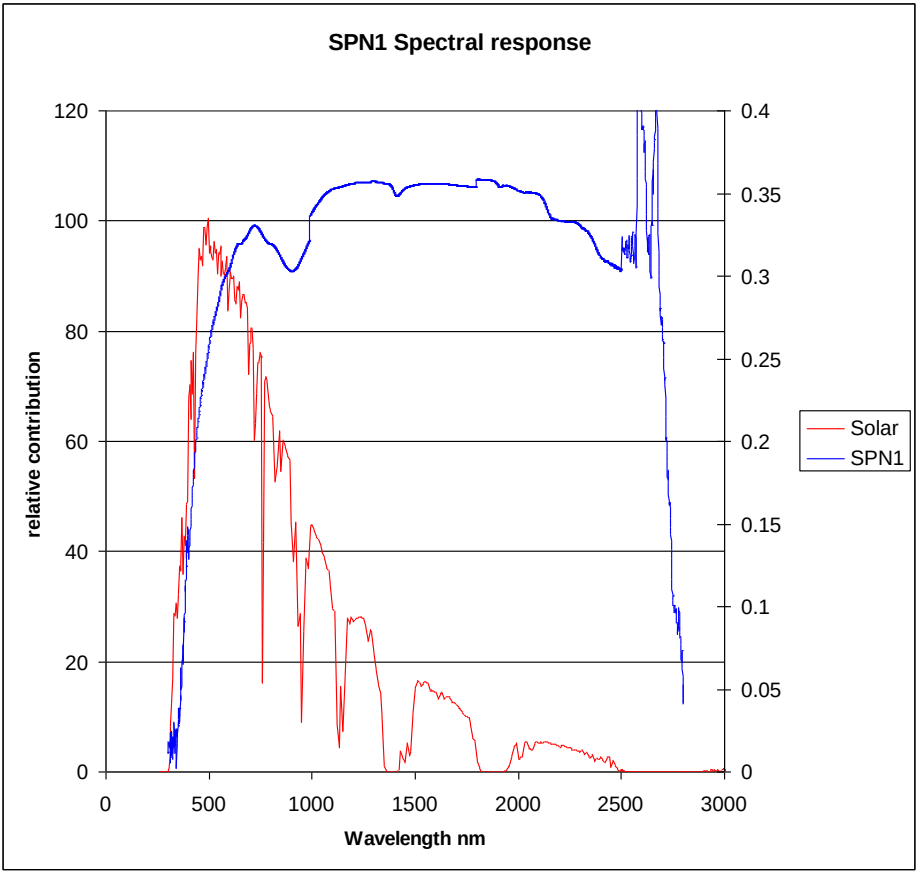

This shows the spectral response of the Sunshine Pyranometer (thermopile, diffusers and dome combined), shown with the solar spectrum at ground level.

SPN1 cosine response

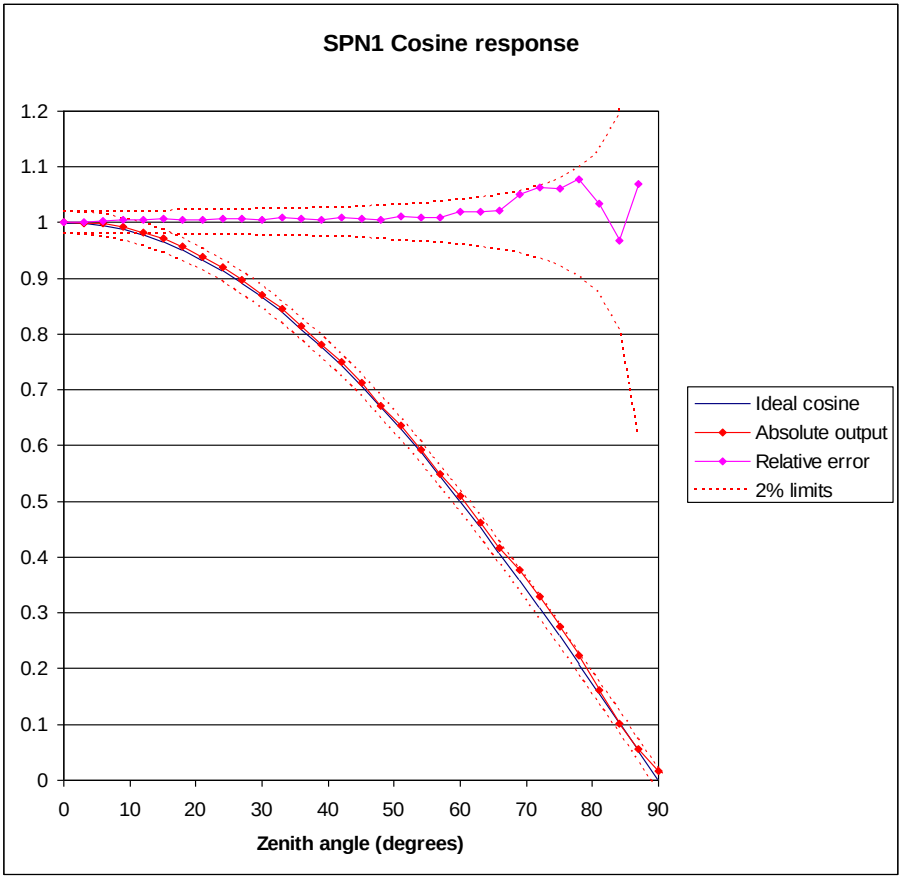

This graph shows the typical cosine response of the Sunshine Pyranometer compared to the ideal cosine curve. The upper curve shows the relative accuracy.

Routine maintenance

Desiccant

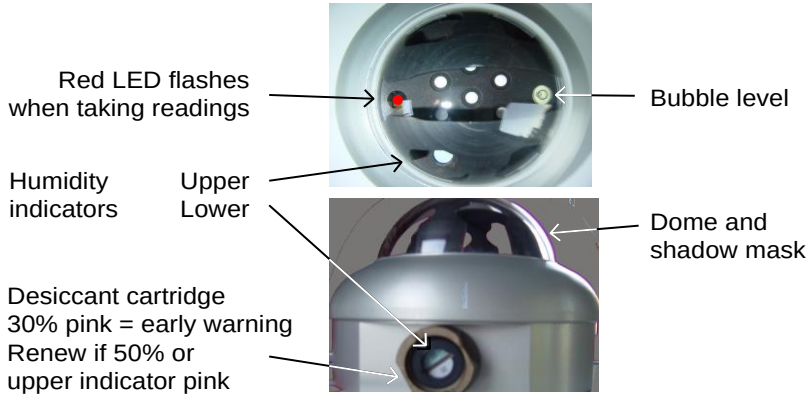

The humidity of the air inside the actual SPN1 dome is indicated by a coloured panel under the dome. The dessicant indicator plug has two more indicators. Blue indicates dry, pink indicates a humidity threshold has been exceeded. Renew when either the 50% RH indicator or the upper indicator in the dome goes pink

Check the desiccant indicators every 3 months. In most conditions, the desiccant should last over 6 months and usually for several years before it needs changing.

To replace or regenerate the desiccant

Remove the indicator plug from the SPN1, using a 24mm A/F spanner, or a wide flat-blade screwdriver. Unscrew the canister from the plug and replace it with a fresh one. Check the O-ring seal in the indicator plug is in good condition. Smear a very small amount of silicone grease on the O-ring to improve its sealing when you reinstall it. Fresh desiccant canisters are available from Delta-T.

The desiccant canister can be regenerated by heating. Heat the canister in a ventilated oven (not a microwave) for four hours at about 100ºC. Allow it to cool down away from moisture before reinstalling it.

Old desiccant can slowly lose its capacity (due to pollutants which bind permanently). To check it, weigh before and after drying. Saturated Si gel can carry 25% of its weight as water, so the 6gm in the canister should lose up to 1.25 gm if it dries from saturation, or ~0.6 gm drying from 50%.

If in doubt, replace with a fresh canister.

Make sure no dust or moisture gets into the SPN1 while the plug is unscrewed.

Maintaining the dome

Air pollution and residues in rain and snow can make the dome quite dirty.

A clean dome is essential to maintain the accuracy of the SPN1.

The dome is made of borosilicate glass. Clean it when necessary with a damp cloth moistened with mild detergent or isopropyl alcohol.

Treatment with a water-repellent coating such a “RainX” can reduce the amount of water and dirt on the dome. These are often sold for treatment of car windows or bathroom mirrors.

Environment and moisture protection

The SPN1 is designed for long-term outdoor use, and is sealed to IP67. It will withstand brief periods of full immersion, but should not be immersed continuously in water.

Internal condensation will be avoided if you keep the desiccant fresh.

Use the sealing caps supplied to protect any connectors you are not using from water and dust.

The SPN1 is robust, but does not have a drop test rating. The glass dome will break if you hit it. Do not drop it.

Calibration procedure and traceability

Factory calibration procedure

The SPN1 is calibrated at the factory against a working standard reference SPN1. Calibration is done before the shadow mask is fitted, so that all the thermopile sensors can be uniformly exposed. Units are calibrated in a 12 inch integrating sphere with a light source which approximately matches bright sunlight in intensity and spectral composition. The calibration factors required for each of the seven sensors are calculated and programmed into the SPN1. This matches the production unit to the reference, and spreads any cosine response variations evenly over the whole range of zenith angles.

The SPN1 is then checked against a second working standard

After the shadow mask is fitted, the SPN1 reading is checked in the calibration lamp rig against a third working standard.

The working standards are routinely checked against two transfer standards which are themselves periodically recalibrated outside at Winster, UK, over a period of several weeks and a range of climatic conditions, against several higher standard references:-

- a primary standard SPN1,
- a Kipp & Zonen CM21 pyranometer,
- a tracking Kipp & Zonen CHP1 pyrheliometer,
- and a solar tracker and shading disk system using ventilated Kipp & Zonen CM6 pyranometers.

The CM21 and CHP1 are periodically recalibrated indoors at Kipp & Zonen against standards traceable to World Meteorology Organisation standards at Davos, Switzerland.

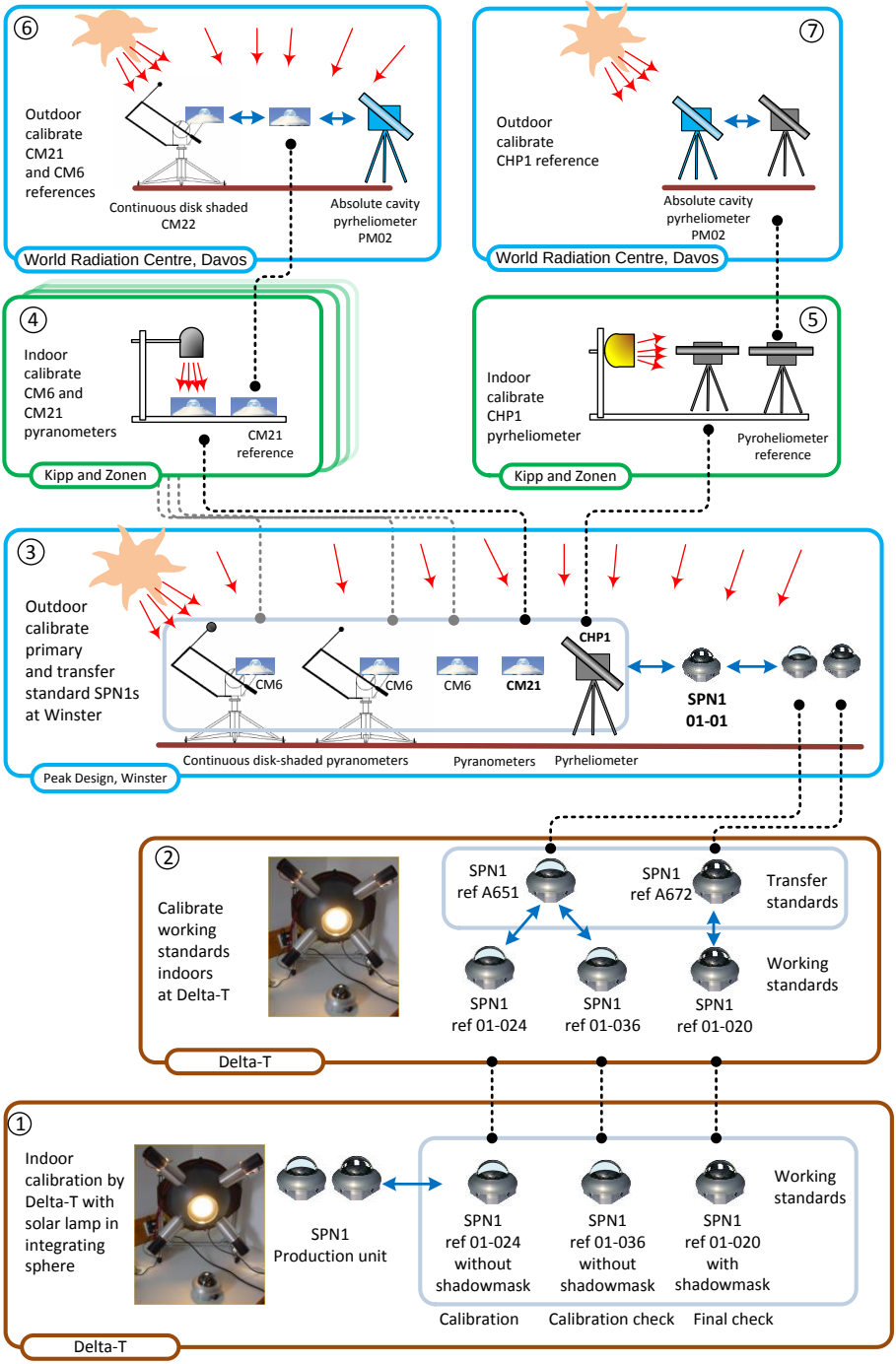

The SPN1 Calibration Chain, traceable to WMO Davos

Recalibration of SPN1

We recommend that SPN1s are returned every 2 years to Delta-T for recalibration. A calibration certificate similar to that on the next page will be provided.

A full recalibration of the SPN1 is not possible without disassembling the SPN1, and requires special light sources.

Delta-T Devices Ltd

SPN1 Sunshine Pyranometer

Calibration Certificate

This is to certify that the Sunshine Pyranometer type SPN1 identified below has been calibrated in accordance with Delta-T Devices Ltd standard production procedures, and conforms to the specifications as detailed.

Serial Number	A100
Date	1 January 2007
Authorised Signature	Kazimierz Bruk

We recommend that this instrument is recalibrated every 2 years.

Traceability

The SPN1 is calibrated under a uniform light source which simulates the solar spectrum against a transfer standard SPN1. The transfer standard is calibrated outdoors against a Kipp CM21 secondary standard pyranometer (calibration traceable to the World Radiometric Reference), with solar tracker and shading disk for diffuse measurement.

Accuracy, Total (Global) and Diffuse radiation

When correctly calibrated, the expected accuracy is given in the table below. The figures give 95% confidence limits, i.e. 95% of individual readings will be within the stated limits under normal climatic conditions.

Overall accuracy:	±5% daily integrals ±5% ±10 $W.m^{-2}$ hourly averages ±8% ±10 $W.m^{-2}$ individual readings
Range	0 to >2000 $W.m^{-2}$
Analogue output sensitivity	1mV = 1 $W.m^{-2}$

Delta-T Devices Ltd
130 Low Road, Burwell, Cambridge, CB25 0EJ, UK
Tel: +44 1638 742922 Fax: +44 1638 743155
email: sales@delta-t.co.uk web: www.delta-t.co.uk

Sample

Warranty and service

Terms and conditions of sale

Our Conditions of Sale (ref: COND: 1/00) set out Delta-T's legal obligations on these matters. The following paragraphs summarise Delta-T's position but reference should always be made to the exact terms of our Conditions of Sale, which will prevail over the following explanation.

Delta-T warrants that the goods will be free from defects arising out of the materials used or poor workmanship for a period of **two years** from the date of delivery.

Delta-T shall be under no liability in respect of any defect arising from fair wear and tear, and the warranty does not cover damage through misuse or inexpert servicing, or other circumstances beyond our control.

If the buyer experiences problems with the goods they shall notify Delta-T (or Delta-T's local distributor) as soon as they become aware of such problem.

Delta-T may rectify the problem by replacing faulty parts free of charge, or by repairing the goods free of charge at Delta-T's premises in the UK, during the warranty period,

If Delta-T requires that goods under warranty be returned to them from overseas for repair, Delta-T shall not be liable for the cost of carriage or for customs clearance in respect of such goods. However, we much prefer to have such returns discussed with us in advance, and we may, at our discretion, waive these charges.

Delta-T shall not be liable to supply products free of charge or repair any goods where the products or goods in question have been discontinued or have become obsolete, although Delta-T will endeavour to remedy the buyer's problem.

Delta-T shall not be liable to the buyer for any consequential loss, damage or compensation whatsoever (whether caused by the negligence of the Delta-T, our employees or distributors or otherwise) which arise from the supply of the goods and/or services, or their use or resale by the buyer.

Delta-T shall not be liable to the buyer by reason of any delay or failure to perform our obligations in relation to the goods and/or services, if the delay or failure was due to any cause beyond the Delta-T's reasonable control.

Service and spares

Users in countries that have a Delta-T Distributor or Technical Representative should contact them in the first instance.

Spare parts for our own instruments can be supplied from our works. These can normally be despatched within a few working days of receiving an order.

Spare parts and accessories for sensors or other products not manufactured by Delta-T, may have to be obtained from our supplier, and a certain amount of additional delay is inevitable.

No goods or equipment should be returned to Delta-T without first obtaining the agreement of Delta-T or our distributor.

On receipt at Delta-T, the goods will be inspected and the user informed of the likely cost and delay. We normally expect to complete repairs within a few working days of receiving the equipment. However, if the equipment has to be forwarded to our original supplier for specialist repairs or recalibration, additional delays of a few weeks may be expected.

Technical support

Technical Support is available on Delta-T products and systems. Users in countries that have a Delta-T Distributor or Technical Representative should contact them in the first instance.

Technical Support questions received by Delta-T will be handled by our Tech Support team. Your initial enquiry will be acknowledged immediately with a “T number” and an estimate of time for a detailed reply (normally a few working days). Make sure to quote our T number subsequently so that we can easily trace any earlier correspondence.

In your enquiry, always quote instrument serial numbers, software version numbers, and the approximate date and source of purchase where these are relevant.

Contact details:

Tech Support Team
Delta-T Devices Ltd
130 Low Road, Burwell, Cambridge CB25 0EJ, U.K.
email for technical support: tech.support@delta-t.co.uk
email for repairs: repairs@delta-t.co.uk
web: www.delta-t.co.uk
Tel: +44 (0) 1638 742922
Fax: +44 (0) 1638 743155

Problems

Problem reports

Always try to isolate the source of the difficulty. It will help considerably if you can mention as many relevant details as possible. In particular:

- A description of the fault, its symptoms, or error messages
- If logging, what logger you are using, details of the logging program and any other devices connected to it
- Details of any PC you are using
- Software version numbers and hardware serial numbers (see below)

Locating version and serial numbers

The SPN1 serial number label is on the lower part of the case. The internal software (firmware) version number is displayed in the About box using SunRead.

Troubleshooting

SPN1 not responding

The red LED inside the SPN1 bezel will flash when the SPN1 is taking readings.

If using the RS232 cable check that you are using the correct cable, and that it is plugged into the same serial port on your PC that you have selected in the SunRead software.

If logging, check the logger cable and compare with your logger wiring connection diagram. Make sure that the DL-Power wire is connected to >5V to enable the analogue outputs.

Check also your logger. For Delta-T loggers check the sensor configuration, power warm-up relay wiring connection and warm-up relay program configuration.

Unexpected output readings

Pay particular attention to the power supply and grounding arrangements.

Try operating without the heater connected and see if that affects the readings.

Try logging the SPN1 direct to a PC using the SunRead software.

Make sure the desiccant is fresh and the dome is clean.

Appendix A: Design and test summary

This appendix gives a brief description of how the SPN1 design works and a summary of the results of the test program. More detailed versions of these are available from Delta-T.

Introduction

Measurement of Direct and Diffuse components of solar radiation has many applications - in modelling the interaction of light with crop canopies, studying the energy balance of structures, or as a meteorological indicator. Instruments that make these measurements have generally been expensive and require considerable attention.

One common approach has been to have two sensors, one measuring radiation from the whole sky, the other measuring the whole sky apart from the sun. The shading is generally done using a shade ring, adjusted to match the track of the sun across the sky for that day, or using an occluding disk held on a robot arm. Both of these approaches require accurate alignment to the Earth's axis, and regular adjustment.

Another well established approach is the Campbell-Stokes recorder, which uses a glass sphere to focus the Direct solar beam onto a recording chart causing a burn, which indicates Direct beam strength.

Design objectives

The aim of the SPN1 design was to measure the Direct and Diffuse components of incident solar radiation, and provide a measure of sunshine hours, in a sensor that used no moving parts, and required no specific polar alignment or routine adjustment. The outputs should be compatible with electronic data loggers, and work at any latitude.

How the design evolved

The prime requirement for this design was to create a system of radiation sensors and a shading pattern such that wherever the sun is in the sky:

- at least one sensor was always exposed to the full solar beam
- at least one was always completely shaded
- all sensors receive equal amounts of Diffuse light from the rest of the sky hemisphere.

A basic layout of 7 sensors on a hexagonal grid, covered by a patterned hemispherical dome was chosen. The dome pattern was generated by computer, using a specially designed evolutionary algorithm.

Calculation of outputs

The shadow pattern consists of equal areas of black and clear bands. This means that all of the sensors receive 50% of the Diffuse radiation, sampled from all over the sky, and at least one sensor receives only this radiation. At least one sensor also receives the full amount of Direct radiation from the sun. Which particular sensors these are depends on the position of the sun in the sky, but the fully exposed one is always the sensor which receives the most radiation, and the fully shaded one the least. All the sensors are measured by the electronics, and the maximum and minimum of the seven readings are used. The maximum reading represents the Direct radiation + half of the Diffuse radiation, the minimum reading represents half of the Diffuse radiation. The outputs are calculated as follows:

Diffuse = 2 * MIN

Direct = MAX - MIN

Total = Direct + Diffuse = MAX + MIN

The Total and Diffuse values are used for the instrument output.

Note: This analysis is independent of the spectral characteristics of the individual sensors, or their spatial response.

Calculations – SPN1 outputs

Let MAX and MIN be the largest and smallest thermopile reading of the seven thermopiles, after being adjusted for any calibration factors (calibration is done in the solar lamp integrating sphere against a transfer standard SPN1)

Then TOTAL = MAX + MIN

DIFFUSE = 2 x MIN x 1.02 (the extra 2% takes away a small systematic bias due to there being typically a 1%-2% spread between sensors under identical lighting conditions).

IF (DIFFUSE > TOTAL) then DIFFUSE = TOTAL (a sanity check as Diffuse obviously can't ever be greater than Total in reality)

There is then a further correction due to the spectral response of the sensors giving a different sensitivity to direct and diffuse light in most conditions:

DIRECT = (TOTAL - DIFFUSE) x 0.99

DIFFUSE = DIFFUSE x 1.14

TOTAL = DIRECT + DIFFUSE. (TOTAL & DIFFUSE are output)

The sunshine presence output is calculated using the ratio of Total and Diffuse:

SUNSHINE if TOTAL/DIFFUSE > RATIO AND TOTAL > 24 $W.m^{-2}$

The value of RATIO is 1.35 for a standard SPN1 with a 120 $W.m^{-2}$ direct beam threshold, and 1.55 for the MeteoSwiss variant of the SPN1 which has a 200 $W.m^{-2}$ direct beam threshold. The 24 W.m-2 value cuts out times when the radiation is so low that there cannot be any direct sunshine, but the TOTAL/DIFFUSE value may be high due to noise or offsets dominating the low reading values.

Test results

SPN1 output

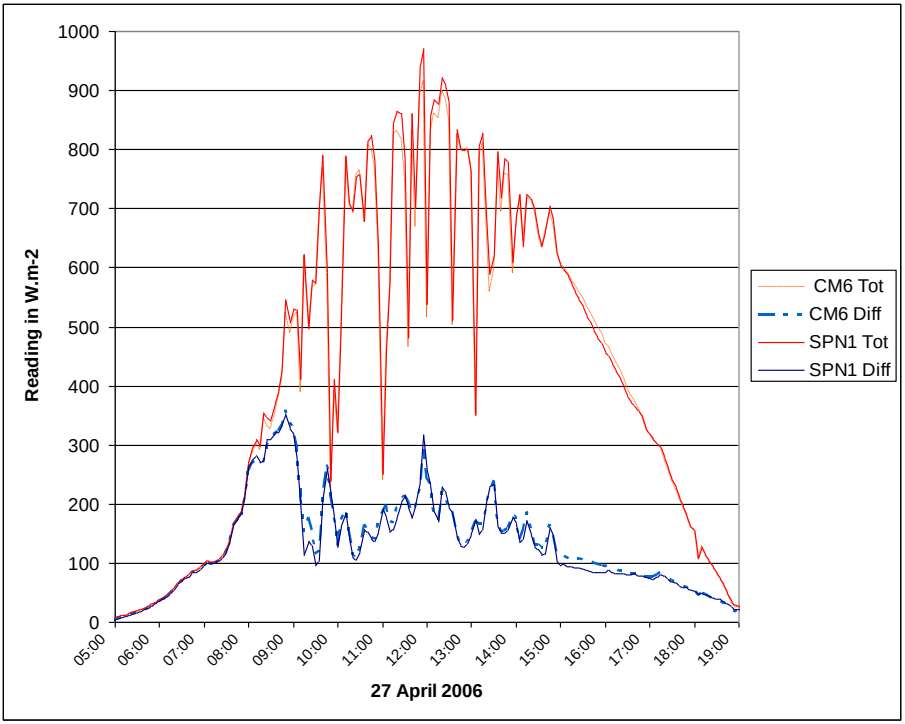

This graph shows a typical daily output from the SPN1. It is plotted against two Kipp CM6 pyranometers, one shaded by a disk on a solar tracking arm. This day started overcast, with cloud breaking up during the middle of the day, followed by a cloudless evening.

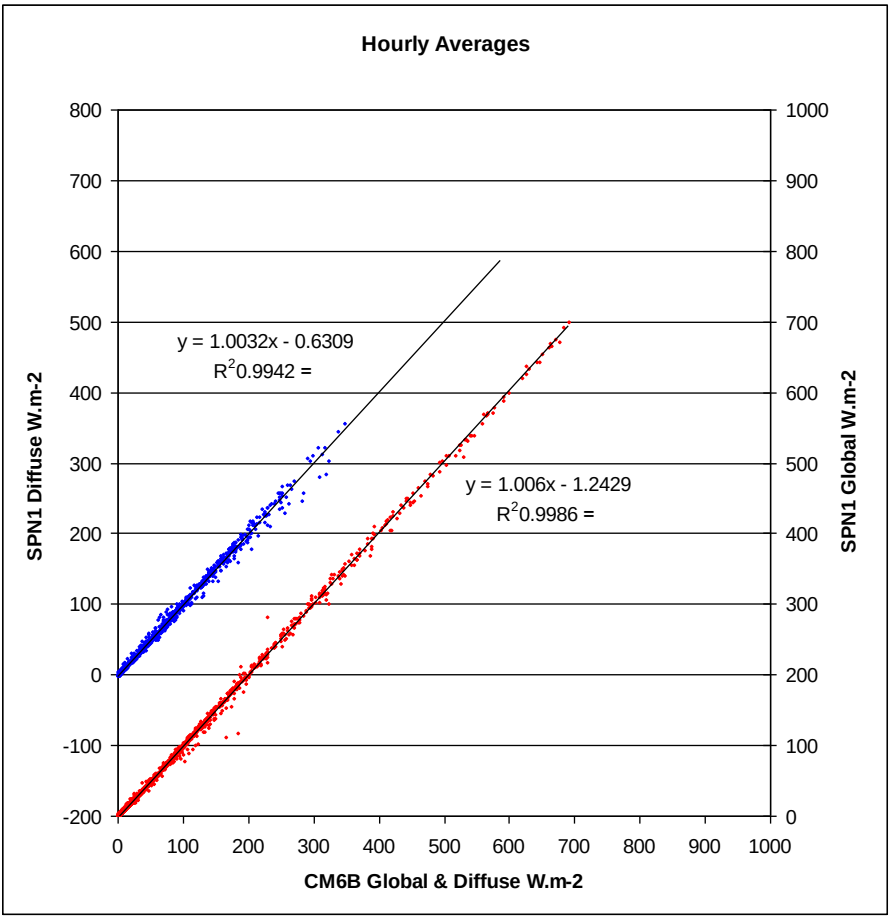

This graph shows SPN1 Total (lower trace) and Diffuse (upper trace) outputs compared with two Kipp CM6s and a solar tracking shade disk. Data recorded at Winster, Derbyshire between September and December 2004. The graph plots hourly averages of readings every 5 seconds. Note the offset Y-axis to separate the Total and Diffuse plots.

Sunshine state

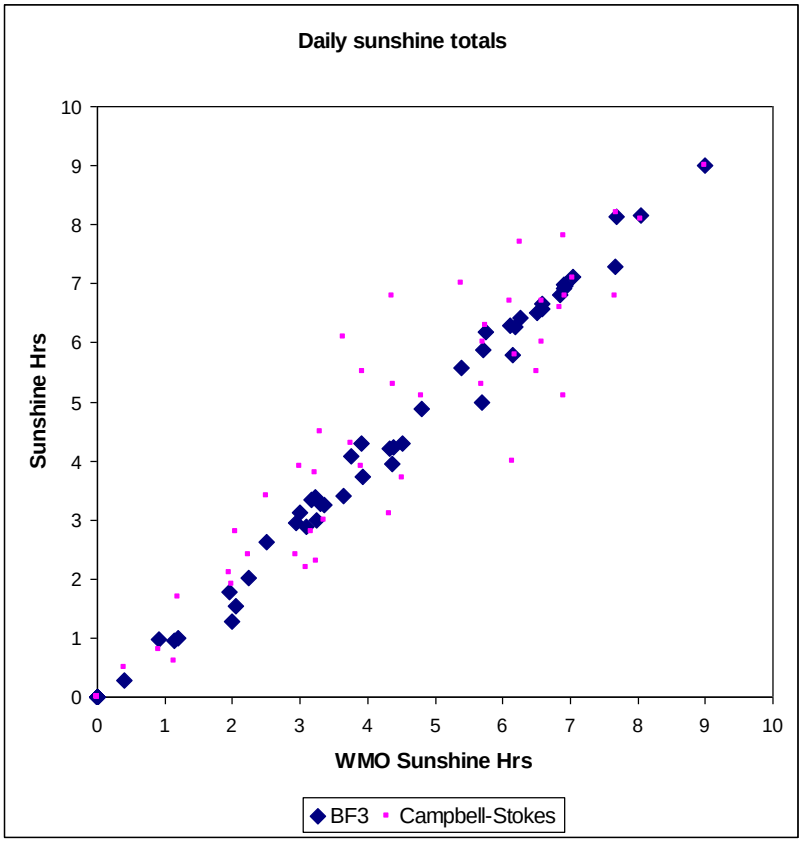

This graph shows daily sunshine totals measured by a BF3, compared to the WMO definition of 120 W.m-2 in the Direct beam. Data recorded at Napier University, Edinburgh between February and July 2001. Comparable data from an adjacent Campbell-Stokes recorder is also plotted. The SPN1 uses a very similar algorithm, and will give comparable results.

Appendix B: RS232 commands

All digital information can be output via the RS232 port (9600,N,8,1). This can be used for reading the sensor, as well as for production test and calibration functions.

Operating modes and serial commands

The SPN1 can be interrogated from any serial port terminal program such as Windows HyperTerminal.
Set the RS232 settings to 9600 baud, No parity, 8 Data bits, 1 stop bit., Flow control: none.
In HyperTerminal, also set 'Append line feeds to incoming line ends' in Settings > ASCII setup.

A terminal screen option is also available in the SunRead software.
To access it , run the SunRead program from the command line as follows:-
Run SunRead.exe /e (Note the space before "/e").
Select **Test, Terminal** to open the Terminal mode

In the following tables, commands TO the sensor via RS232 are in **bold**, responses (also via RS232) are in normal weight. All RS232 input characters are echoed back except for the 'R' command.
For commands with more than one input character, a command is abandoned if the input is not within appropriate range, or 1 minute after a key press.
Unrecognised and aborted commands return '?'.

Sleep mode

Processor is in its lowest power state.
If the sensor is asleep when the DL-POWER pin goes high, then the sensor will wakeup and start to output the analogue values, as described above.
Any RS232 input will wake the sensor up for long enough to respond to the command. The suggested procedure is to send an '**R**', wait for the '»' response, then send the desired command, and wait for the terminating <CR>.

RS232 Input	Response	
R	» (ASCII 175)	For BF3 compatibility
S	`tttt.t,dddd.d,s<CR>`	Send the current reading, in comma separated ASCII. tttt.t & dddd.d are the Total & Diffuse readings, in $W.m^{-2}$. s is sunshine presence 0 or 1. A one off reading is taken when the command is received.

I	SPN1 v1.03 Mar 13 2007<CR> Units: W.m^{-2}<CR> 1mV radio off <CR> A106<CR> <CR>	Status information – code version Output units - W.m^{-2} Battery voltage, radio link status. (Neither normally installed in SPN1) Instrument serial number
T	TEST:	Enter TEST mode.
Z	2006/01/10 00:09:52	Displays a date and time (reset at power up)
?	I Status Info<CR> S Send data<CR> T TEST: mode<CR> Z Date & Time<CR>	A reminder of the command set
SOP		SOP (ASCII 15) marks a Start of Packet (used for downloading new firmware)
Any unrecognised character	? »	Any unrecognised character also causes the sensor to recalibrate its internal oscillator.

TEST mode

The sensor is permanently awake, and the analogue outputs are not updated. It will return to Sleep mode after 15 minutes with no key pressed. After completion of any command, <CR> and the TEST: prompt will be echoed. Any unrecognised character or incorrectly formatted input will return the sensor to Sleep mode.
This mode is designed for manufacturing and technical support purposes, and is not intended to be accessed by the user or user software. The format of these commands may change without maintaining backwards compatibility.

WARNING – some of these commands can permanently affect the calibration of the instrument

RS232 Input	Response	Action
R	» (ASCII 175)	Returns to Normal mode.
Yyyyy/mm/dd	2007/03/14 00:45:39	Set the date
Hhh:mm:ss	2007/03/14 17:47:00	Set the time
Anr	A11 = 0806	Read the value of A/D n. r=0 reads with reference to Vcc, r=1 reads wrt 2.5V. Output is in A/D units 0000 – 4095

Bn	B1 145 38 249 235 231	Read the output of thermopile n. Output is in A/D units, and is updated every 250ms until receipt of another character. Backspace characters used to overwrite the display.
Cnnnn	OK	Calibrates thermopiles to value nnnn.(nnnn is any integer between 0000 and 2500 in $W.m^{-2}$). Updates values in user calibration area. If nnnn = 0000, then calibrate to average value of the 7 thermopiles.
CLEAR	OK	Resets the user calibration values to unity. Any previous calibration information is lost! (was 'K' previous to v1.03)
DEFAULT	OK	Copies contents of factory calibration area to user calibration area. (was 'D' previous to v1.03)
E	User: 04096 04096 … Factory: 04096 04096 …	Displays 7 calibration values (one for each thermopile) held in user and factory default areas. The displayed value should be divided by 4096 to give the actual value.
F	DCO 928 kHz	Reports frequency of main CPU clock
G	DCO 949 kHz	Calibrates frequency of main CPU clock
I	Therm temp 20.4øC Chip temp 34.5øC Batt 0 mV Ext 5874 mV Vcc 3299 mV 2006/01/10 00:02:43	Reports temperature of PCB thermister and internal CPU temp (can be very inaccurate) Reports battery voltage (not usually fitted on SPN1), external supply, and regulated Vcc. Also reports if DL-POWER or HTR-POWER inputs are active. Reports date & time (reset on power up)
Nc,nnnnn	OK	Sets user calibration factor for individual thermopile 'c' to 'nnnnn'. 04096 represents unity
Onnnn,nnnn		Sets DAC0 (Total output) and DAC1 (Diffuse output) to nnnn (0 – 4095, 2.5V full scale)
Pn.nx	<CR> or =X<CR>	If x is 0 or 1, sets CPU pin Pn.n to x If x is '=', reads value of pin Pn.n
Q	0 214 186 206 246 263 ….	Reports 8 raw A/D readings from thermopile channel 0 (ground) and 7 thermopiles.
S	266.7, 217.2,0 (1 195 170 187 226 242 163 154)	Reports calculated Total, Diffuse & sun outputs, and the raw thermopile readings used to generate them.

Tn.nn	`<CR>ratio 1.35`	Sets sunshine threshold ratio to n.nn (range 1.00 to 2.50) T<CR> just reports ratio.
WRITE	`OK <CR>`	Copies contents of user calibration area to factory calibration area. (Was 'W' previous to v1.03)

Xnccc<CR>
X<CR>
	`string 0 A100`
	
	`0: A100`
	`1: 09-Mar-07`
	`2: 7300-934`
	`3: 8400-234`
	`4:`
	`5:`
	`6:`
	`7:`
		The sensor records 8 text strings of up to 16 characters each.
		Xnccc<CR> sets string 'n' to 'ccc'
		X<CR> reports all 8 strings.
		String 1 is serial number
		String 2 is calibration date
		String 3 & 4 are Main & thermopile PCB serial numbers
		Others as yet unused

?	`Yyyyy/mm/dd Date`
	`Hhh:mm:ss Time`
	`An0, An1 read ADCn Vcc/Vref`
	`Bn read PD`
	`Cnnnn Calibrate`
	`CLEAR Set cal to 1`
	`DEFAULT Restore default cal`
	`E cal values`
	`F Get DCO Freq`
	`G Set DCO to 1MHz`
	`I Status Info`
	`Nc,nnnnn set cal c to nnnnn`
	`Onnnn,nnnn set DACs`
	`Pn.nx read/set pin x is 01=`
	`Q Scan PDs`
	`R Reset to normal`
	`S Send data`
	`Tn.nn Sunshine ratio`
	`WRITE user cal to default`
	`XncccCR Write ccc to string Xn`
		A reminder of the TEST: command set.

Appendix C: DNI RS232 Commands

Introduction

SPN1 firmware version (1.09 and later), which runs on the microprocessor in the SPN1, is also able to calculate DNI, the Direct Normal Irradiance.

This information is supplied via the RS232 serial port upon sending the SPN1 the necessary information and the appropriate command. For the SPN1 to calculate DNI it needs to be supplied with the **Latitude**, **Longitude**, and the correct **date**, the **local time** and the **time zone offset from GMT**.

The information is only available on the serial output and is obtained by sending RS232 commands to the SPN1. So to get the DNI value you need a program able to send RS232 commands and receive RS232 text strings in reply.

This feature is provided mainly for those with a programming background or for engineers who are familiar with the use of PC programs such as HyperTerminal or building management software, or the programming language of their chosen data logger.

To use this feature you need one of the following

- A HyperTerminal or similar terminal emulator program running on a PC
  Note: The recent versions of MS Windows from Vista onwards do not provide the HyperTerminal program but various terminal emulators are available on the internet;
- A data logger which supports serial communications;
- Your own utility or building management software.

Alternatively, if working directly with RS232 commands is not for you, we provide an alternative method for retrospectively calculating DNI from logged Global and Diffuse readings. This uses an Excel spreadsheet. A working and reusable demonstration spreadsheet and an application note are available for download at www.delta-t.co.uk

Links: http://www.delta-t.co.uk/spn1-resources.asp

One benefit of using the SPN1 firmware DNI feature is you get the result in real-time, whereas the spreadsheet option provides it some time later.

The spreadsheet option is also useful as a teaching tool and for checking you are setting the parameters correctly.

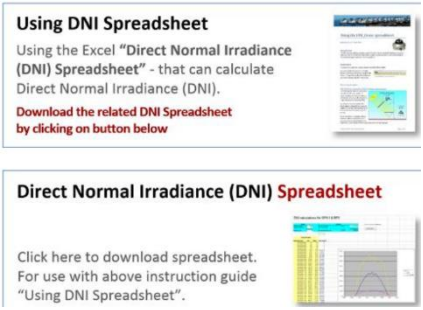

Figure 1 An alternative to using the SPN1 firmware to derive DNI is to download the Excel spreadsheet and applications note at www.delta-t.co.uk

About DNI

DNI: What is it?

Direct-Normal Irradiance (DNI) also called Direct-Normal Solar Irradiance (DNSI) is the energy in the solar spectrum incident in unit time at the Earth's surface on a unit area perpendicular to the direction to the Sun.

DNI: Why needed?

This is an energy based method against which solar panels may be compared.

It is a common practice to compare solar panel efficiency to DNI. Maps of DNI are readily available and are often used to make a quick estimate the suitability of a particular site for solar power. One reason for this is that historical maps of DNI readings over several years are readily available in some countries (e.g. USA). In addition DNI maps at ground level can be calculated from satellite data with a suitable correction for travelling though the earth atmosphere.

The goal of accurately characterising the efficiency of a solar photovoltaic panel is of great interest to the solar photovoltaic industry. It is quite a complex subject - Wikipedia is a good place to start. Knowledge of the DNI at different sites is useful when making comparisons between field trials.

If a solar panel exactly tracks the sun (this requires two axes of movement) then it is common practice to compare its efficiency relative to Direct Normal Irradiance (DNI).

Another use of DNI is its use as an intermediate value when calculating how much of the suns' radiation is scattered or adsorbed by the atmosphere. The suitability of the SPN1 for this is being investigated. For further details see "The SPN1 and Atmospheric Light Scattering" at http://www.delta-t.co.uk/spn1-resources.asp.

How do I calculate DNI if my SPN1 points directly at the sun?

The Direct Normal Irradiance is given by the equation:

DNI = Direct = Total(Global) –Diffuse.

How do I calculate DNI if my SPN1 is horizontal?

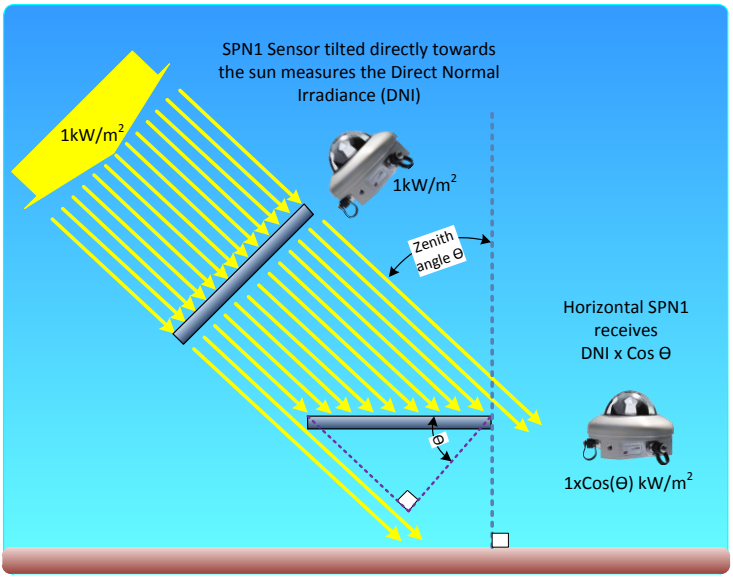

DNI = (SPN1 Direct)/Cos Θ……..(1)

Where:- Θ = zenith angle

SPN1 Direct = SPN1 Total(Global) – SPN1 Diffuse.

Given the latitude, longitude and correct time relative to GMT the SPN1 firmware works out the sun's zenith angle and calculates DNI for a horizontally mounted SPN1 using equation 1.

Note: Delta-T also can provide an Excel spreadsheet add-in to do this - see www.delta-t.co.uk.

You may find this spreadsheet useful, for instance - to check you are sending the SPN1 the correct parameters.

Location & Time

It is important to use the correct sign conventions to use when specifying Latitude, Longitude and also the time zone offset from GMT.

Time Zone

You need to know the local time at the SPN1 and how many hours you are ahead or behind GMT (Greenwich Mean Time) or UTC (Universal Time). For our purposes GMT and UTC are equivalent. The time zone generally increases by 1 hour for every 15° East of Greenwich, with the international date line separating GMT+12Hrs from GMT-12Hrs. There are however many exceptions, as the map below demonstrates. The SPN1 time zone must be in the range -24:00 to +24:00 in hours and minutes.

Location

Your site location is another key input to many of the functions.

Latitude is entered in decimal degrees, with positive values for North, negative values for South. Latitude must be in the range -90° to +90°.

Longitude is entered in decimal degrees, with positive values for East of the Greenwich meridian, negative values for West. Longitude must be in the range -180° to +180°

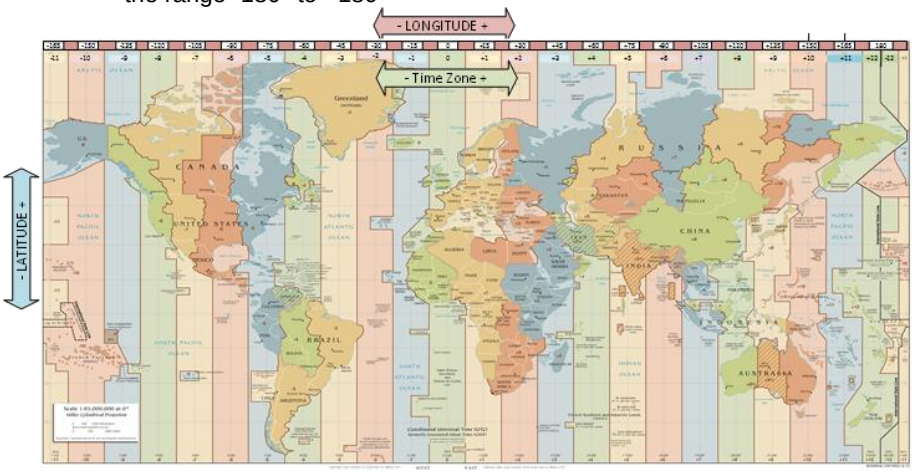

Figure 2 Illustration indicating sign conventions used for entering Latitude, Longitude and time zone in the SPN1 DNI calculations.

GPS time and position

For simplicity, we recommend that you take the latitude, longitude and GPS time from a GPS receiver, and set the SPN1 time zone to 00:00. These will then be correct wherever in the world you are.

SPN1 electrical connections

RS232 pin connections

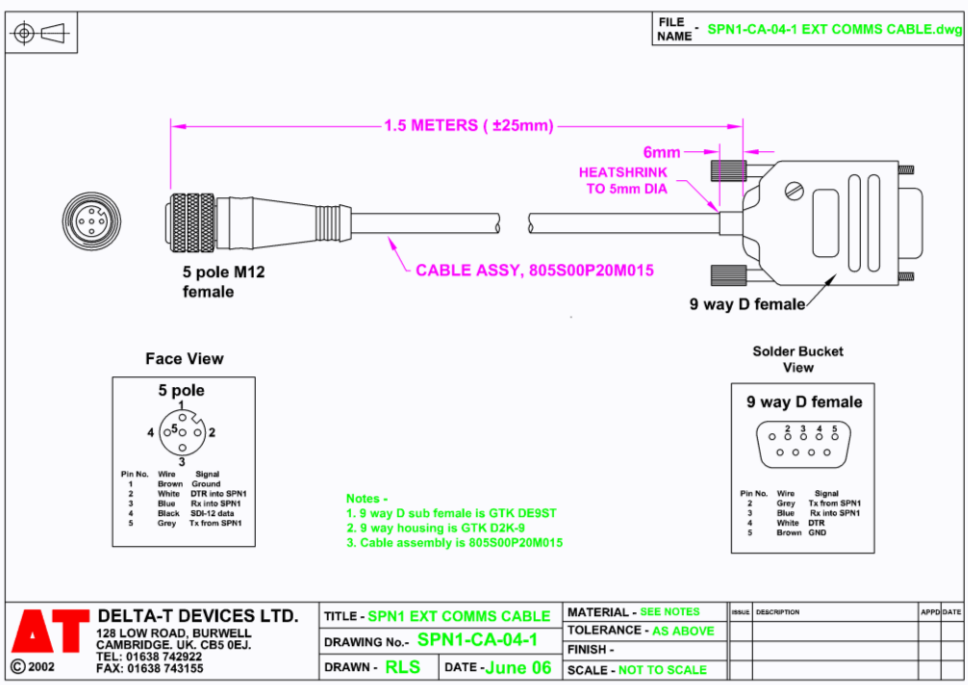

Electrical limits

The RS232 signal is a ‘true’ RS232 signal, so voltage levels on the Tx & Rx lines are bipolar in the range ±3V to ±15V. This is suitable for connection to a PC serial port. Only the Tx, Rx and Gnd wires are used for communication.

Baud rates

The SPN1 communicates at a fixed baud rate of 9600 baud, 8 data bits, no parity, 1 stop bit. Your serial port must be set to match this.

Power supply

If there is sufficient power available from the DTR signal (an output from the PC serial port), this will power the SPN1 sufficiently to take readings. If there is insufficient power available from the DTR signal, this wire can be

detached from the serial port, and connected to a DC supply in the range 5V – 15V. Alternatively, the SPN1 can be powered through the heater power wires in the analogue connector (see the SPN1 Quickstart guide for cable description). If you want to use the SPN1 internal clock, this power supply should be permanently enabled. If you need to minimise power consumption, the power only needs to be applied for the duration of the communication session.

RS232 Commands for obtaining DNI

These commands added to the SPN1 firmware at release 1.08 to enable the calculation of DNI are part of a larger set of commands.

For a complete description of all the commands and their use please see **Appendix B: RS232 commands** on page 45.

You type	Typical reply	Notes
Z<CR>	**Format:** YYYY/MM/DD hh:mm:ss **Example:** 2006/01/10 00:09:52<CR>	**Report** the **date** and **time** (reset at power up) Time is LOCAL time, with an offset from GMT specified by 'L' command (See the SPN1 technical manual for the complete set of commands).
ZYYYY/MM/DD hh:mm:ss<CR>	2006/01/10 00:09:52<CR>	**Set** and then **report** SPN1 internal **clock** as above
L<CR>	**Format:** dd.d,ddd.d,hh:mm<CR> **Example:** 39.9,-098.96,-08:00	**Report** current **Latitude**, **Longitude** & **time zone**. Latitude & Longitude in decimal degrees, time zone in hours and minutes.
Ldd.d,ddd.d,hh:mm <CR>	dd.d,ddd.d,hh:mm<CR>	**Set** and then **report** SPN1 **Latitude**, **Longitude** & **time zone.** Latitude & longitude stored to 1 decimal place.
A<CR>	GMT,2014/01/10 13:09:52,148.1,33.0<CR>	**Calculate** the solar **Azimuth** and **Zenith** angles using the previously stored Latitude, Longitude, time zone and SPN1 local clock time. **Report** the **date**, **GMT**, **Azimuth** and **Zenith** angle (in degrees, reported to 1 decimal place). Calculation takes 700ms approx.
AYYYY/MM/DD hh:mm:ss<CR>	GMT,2014/01/10 13:09:52,148.1,33.0<CR>	**Calculate** the solar **Azimuth** and **Zenith** angle using the previously stored Latitude, Longitude, time zone and the supplied Local Time. **Report** the **Date** and **GMT time**, **Azimuth** and **Zenith** angle. Calculation takes 700ms approx.

D<CR>	`GMT,2014/01/10 13:09:52, tttt.t,dddd.d ,s,DDDD.D<CR>`	**Calculate DNI** from SPN1 readings, using the stored Latitude, Longitude, time zone and SPN1 local time. Values reported to 1 decimal place. **Display GMT**, **Total**, **Diffuse**, **Sun Status** & **DNI** (in $W.m^{-2}$) Calculation takes 700ms approx.
DYYYY/MM/DD hh:mm:ss<CR>	`GMT,2014/01/10 13:09:52, tttt.t,dddd.d ,s,DDDD.D<CR>`	**Calculate DNI** from SPN1 readings, using the stored Latitude, Longitude, time zone and the supplied local time. **Display GMT**, **Total**, **Diffuse**, **Sun Status** & **DNI** (in $W.m^{-2}$) Calculation takes 700ms approx.

The SPN1 clock and any input times to these commands are assumed to be in the local time represented by the time zone set using the 'L' command. The SPN1 then converts this local time into universal time (UTC or GMT) for use in the solar position calculations. The results reported from the 'A' and 'D' commands show the universal time (GMT) used in the calculation. This also gives you the opportunity to check that you have the correct time zone settings for your particular local clock time.

Strategies for use of these commands

The latitude, longitude and time zone are stored in persistent memory in the SPN1, so only need to be set once on installation. They will then be correct unless the SPN1 is moved, or the time offset changes (e.g. daylight savings time?).

The SPN1 clock will keep good time for many weeks or months, but the SPN1 has no internal power source, so it will reset on a loss of power. We recommend that you check and set the SPN1 clock on power up, and thereafter once a day, if you are using it to provide your local time. Otherwise, you can provide the current time from your system clock for every DNI reading you make.

We recommend that you use a GPS receiver to provide accurate location and time information wherever possible. This will give you accurate location and time information, but the GPS signal can easily be lost through interference, so may not always be available. In this situation, you would need two separate events:

1. Daily, or on power up. Check for valid GPS position & time, set SPN1 latitude & longitude, with 00:00 time zone. Set SPN1 clock to GPS time.

2. Whenever a reading is required. Use 'D' command to ask the SPN1 for DNI data. Use the 'S' or 'F' commands if you also need Global, Diffuse, or individual detector values.

Conversion of GPS sentences for use with SPN1

Most GPS receivers by default will send out time and location information using the NMEA standard – this is a 4800baud RS232-based output. Data is usually sent out every second, though the data rate can be adjusted as desired. They will normally send a small number of data ‘sentences’, though there is a much larger number that can be sent if desired. Most GPS receivers also have a manufacturer’s proprietary data format which will provide more information, and at a higher speed. Use the manufacturer’s data sheet to be sure what is happening.

In general, the default NMEA setting is sufficient. Because the data is sent out as a continuous stream, your system will need some way of buffering this data, so that you can search for the right sentence in amongst the range of different sentences that are sent.

The NMEA sentences from a GPS receiver will start with $GP, and end with <CR><LF>. All receivers will send the recommended minimum data sentence, or RMC. This will look similar to:

```
$GPRMC,123519,A,4807.038,N,01131.000,E,022.4,084.4,23039
4,003.1,W*6ACRLF

Where:
     RMC          Recommended Minimum sentence C
     123519       Fix taken at 12:35:19 UTC
     A            Status A=active or V=Void.
     4807.038,N   Latitude 48 deg 07.038' N
     01131.000,E  Longitude 11 deg 31.000' E
     022.4        Speed over the ground in knots
     084.4        Track angle in degrees True
     230394       Date - 23rd of March 1994
     003.1,W      Magnetic Variation
     *6A          The checksum data,always begins with *
```

If possible, check the checksum is correct. Calculating the checksum is very easy. It is the ASCII representation of two hexadecimal characters of an XOR of all characters in the sentence between – but not including – the $ and the * character. If the checksum is incorrect, don’t use the data.

Only use this data if the Status is given as ‘A’ (or sometimes ‘A0’, ‘A1’). If it is shown as ‘V’, the data will be inaccurate or incorrect.

The date and time are given as 6 digit numbers. These need to be reordered and reformatted with the correct delimiter characters for the SPN1, and the correct century added. So from a GPS time format of hhmmss and date format of DDMMYY, you need to construct and SPN1 date & time format of YYYY/MM/DD hh:mm:ss.

The latitude and longitude are a little more awkward, because they are given in degrees and decimal minutes, e.g. ddmm.mmm for latitude, or

dddmm.mmm for longitude. The sign then follows, as either a N or S, E or W. The number of decimal places can be variable.

You therefore need to calculate the decimal degrees as dd + mm.mmm/60. Multiply by -1 if the sign character is S (or W for longitude). Then either round to 0.1°, or truncate to 2 or 3 decimal places. The SPN1 will round to 0.1° and store this rounded value internally.

SPN1 DNI Command usage

General command flow

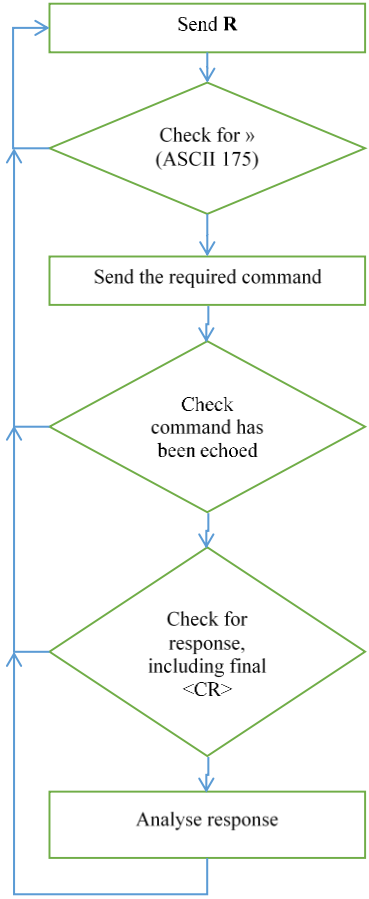

The **R** command wakes the SPN1 and puts it into a known state. If necessary the internal oscillator is calibrated to ensure accurate RS232 character recognition.

The SPN1 responds with the '»' prompt (ASCII 175) to confirm this.

This command normally returns immediately, but you should wait up to 1s to be sure of this.

The command you send is always echoed back in full before any response is sent.

Any response will always end with a <CR> (ASCII 13).

A few commands (**I** and **?** - see the technical manual for the full command set) return several lines of information, so you will need to wait for several <CR> to be received to be sure the command has completed.

The commands will normally complete in less than 1s, plus any additional communication delay if you are accessing the SPN1 remotely

Glossary

Azimuth angle - the horizontal angle between the sun, or a light source simulating the sun, and North, increasing in the direction NESW. The SPN1 does **not** have to be aligned towards North for correct operation (unlike most other devices).

Beam fraction - the fraction of Total incident radiation in the Direct beam.

Cosine response - the response of a sensor in which the sensitivity to a ray of light is proportional to the cosine of the angle of incidence of the ray (measured from the perpendicular to the sensor surface).

Diffuse light - light from parts of the sky other than directly from the sun, from scattering in the atmosphere or reflection from clouds.

Direct beam - light coming directly from the sun, with no scattering. Usually treated as if it comes from a point source.

DNI - Direct Normal Irradiance is the energy in the solar spectrum incident in unit time at the earth's surface on a unit area perpendicular to the direction of the sun.

Energy - radiation measured with equal sensitivity to the energy content regardless of wavelength. It is measured in units of $W.m^{-2}$. The normal daylight maximum is a little over 1000 $W.m^{-2}$.

Sunshine - the threshold for *bright* sunshine, defined by the WMO, is 120 $W\ m^{-2}$ of Direct beam solar radiation, measured perpendicular to the direction of the beam. It is defined this way in order to ensure historical continuity with Campbell-Stokes recorders.

Total radiation - the sum of Direct beam and the Diffuse light.

Zenith angle - the angle between the centre of the sun and the point directly overhead.

See also **SPN1 Technical Fact Sheet** on the Delta-T Software and Manuals DVD or online at www.delta-t.co.uk.

Index

A

Accessories 10
accuracy 26, 27
Accuracy
  cosine response 26
  spectral response 26
Advantages of SPN1 6
Azimuth angle 60

B

Beam fraction.....60
BF2 and BF3.....7

C

Cables 13
  Length 13, 14
Calculation of Outputs 41
calibration 33
Circuit schematic
  output 18
Construction.....8
Contact details.....38
Control
  use of sunshine output to switch an
    external load.....22
Cosine response 30, 60

D

data logger.....6
  analogue outputs 17
Desiccant.....31
Design and Test Summary 40
Diffuse light.....60
Direct 5
Direct beam 60
DL2e Logger.....24
DL6 Logger.....24
DNI
  Direct Normal Irradiance 49

E

Earthing.....23
Energy 60
Environmental sealing.....27
Error
  SPN1 not responding.....39
  Unexpected output readings 39
Errors
  offset 26
  shadow mask 26
  thermopile matching.....26
EXT/M12-x
  analogue extension cable.....13, 28

G

Glossary 60
GP1 logger
  cabling.....13
GP1 Logger.....24
GPS 57
GPS time 52
Ground connection
  options.....23

H

Heater.....16

L

Latitude capability.....27
Latitude, Longitude
  ...and Time Zone 52
Logger 11

M

maintenance 31
Mounting.....10

N

Non-linearity 27

O

Offset errors 26

P

PC 12, 25
power
requirements 6
wiring options 19
Power 15
Power connection options 15
Power requirement 28
Problems 39

R

Range 27
Recalibration 35
Resolution 27
Response time 27
RS232
Electirical limits 53
for Direct Normal Irradiance 55
pin connections 53
RS232 commands 45

S

screen connection
options 23
sensitivity 27
serial
use with PC or serial device 25
Serial cable connections 25
Serial connections 25
SPN1-RS-10 28
serial port 7
Service 37, 38
dessicant 31
dome 32
Size & Weight 28
solar spectrum 29
Spares 38
Specifications 27
Spectral response 27, 29
Spectral sensitivity variation 27
SPN
Baud rates 53
SPN1 28
DNI command usage 59
Power supply 53
SPN1 output 42
SPN1/BP
levelling base plate 28
levelling plate 10
SPN1/w-05
analogue cable 13, 28
pin-outs and wiring 17
SPN1-CAL
calibration service 28
SPN1-RS-10
serial extension cable 13
SPN1-RS232
pin-outs and wiring connections 25
serial cable 13
serial cable 28
SPN1-SD
spare desiccant 28
SPN1-UM
user manual 28
Stability 27
sun output 17
wiring connection options 21
SunRead 6, 12
Sunshine 60
Sunshine status 5
Sunshine status threshold 27
SPN1/ARM 10, 28

T

Technical reference 27
Technical Support 38
Temperature coefficient 27
Temperature range 27
Terminal emulator mode 45
Terms and Conditions of Sale 37
Tilt response 27
Total radiation 60
Troubleshooting 39

W

Warranty 37

Wiring
analogue signals and heater power....17
output schematic 18

Z

Zenith angle.....60
Zero offsets 27